Skyline

Book Binding Machines & Supplies

Sales • Service • Repair

Professional Service – Fast Nationwide Shipping

1-866-455-9900

www.OnlineSkyline.com CustomerService@onlineskyline.com

CROSS / CUT 2x15mm

Mod.2604 Oil A

01.03.2009

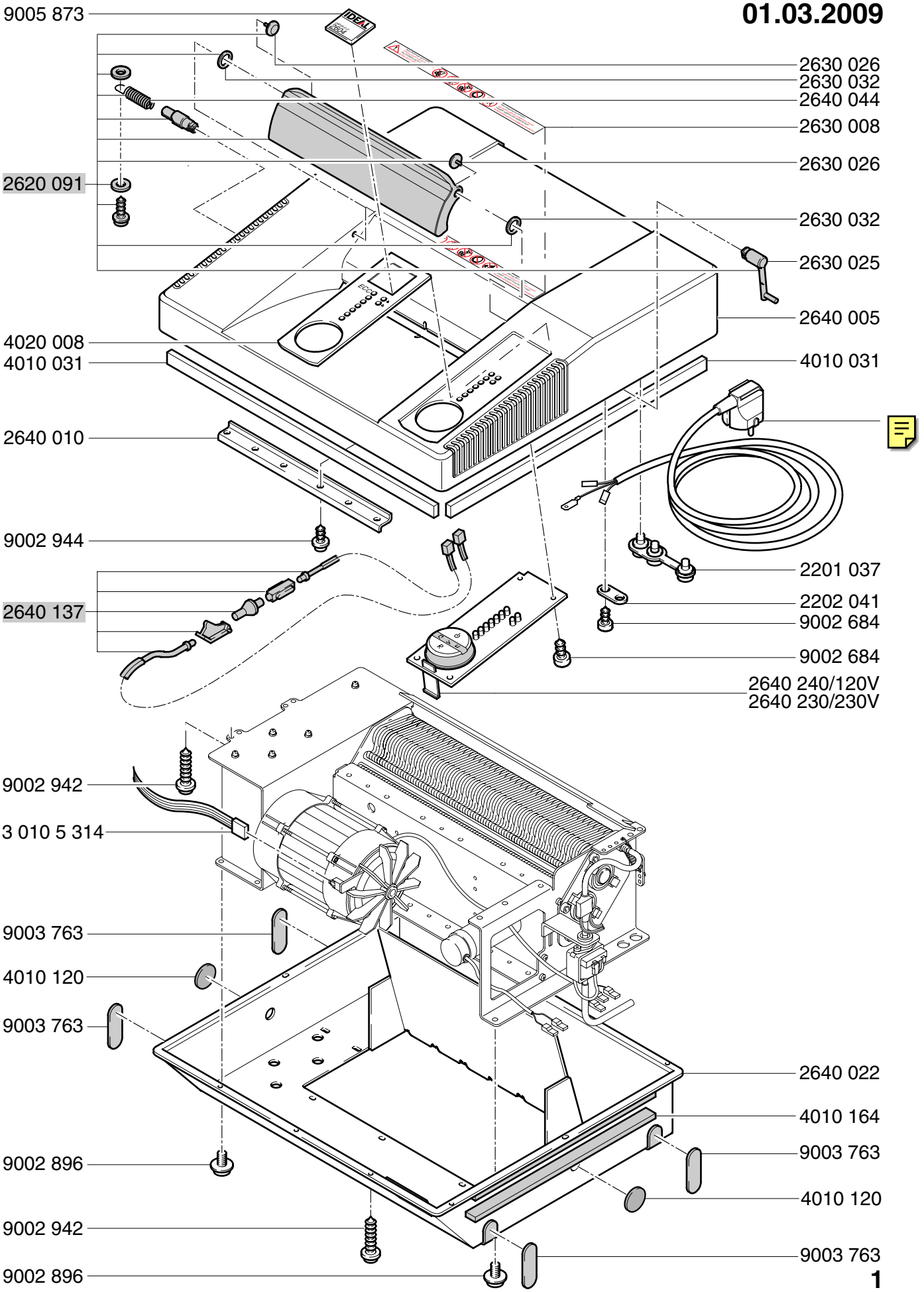

CROSS / CUT **2x15mm**

Mod.2604 Oil A

01.03.2009

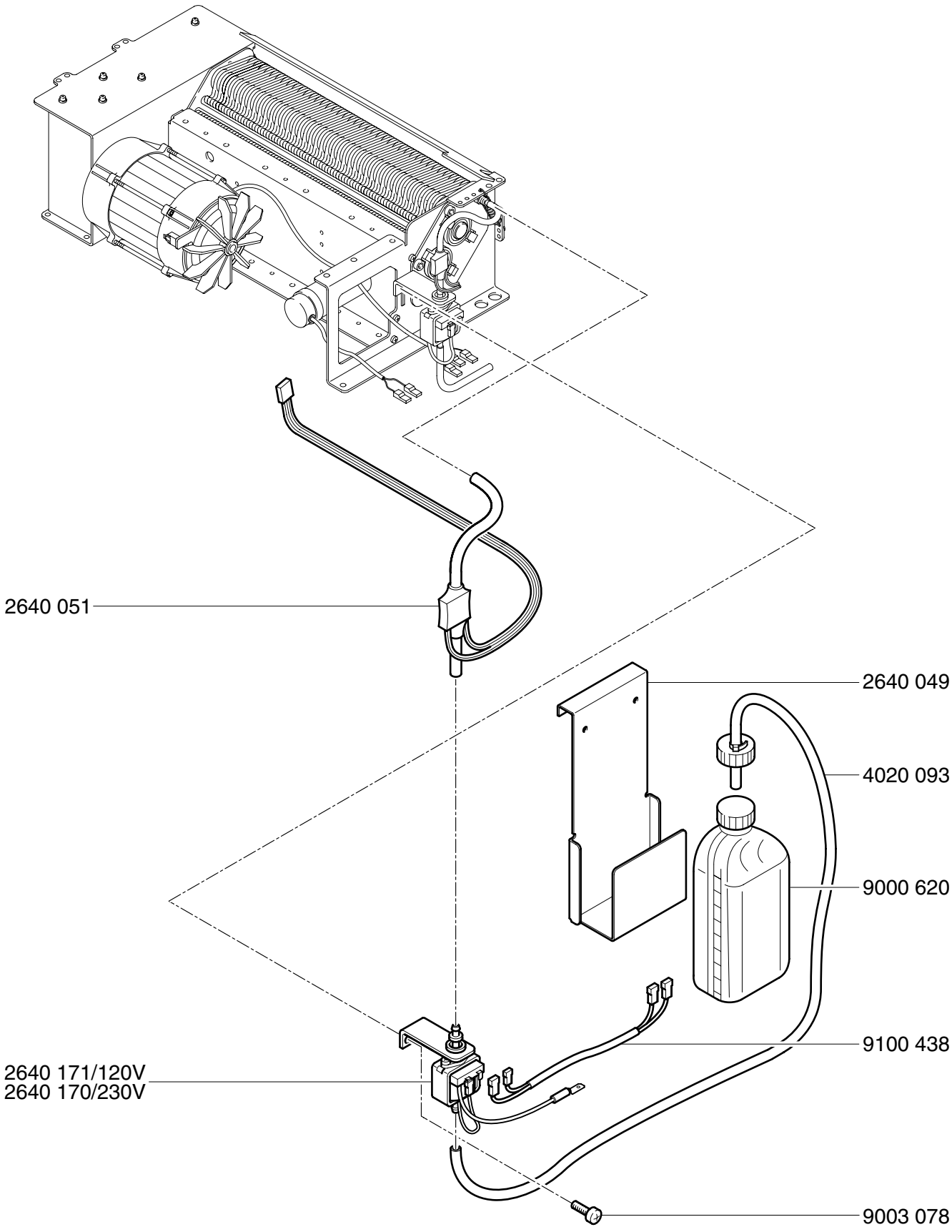

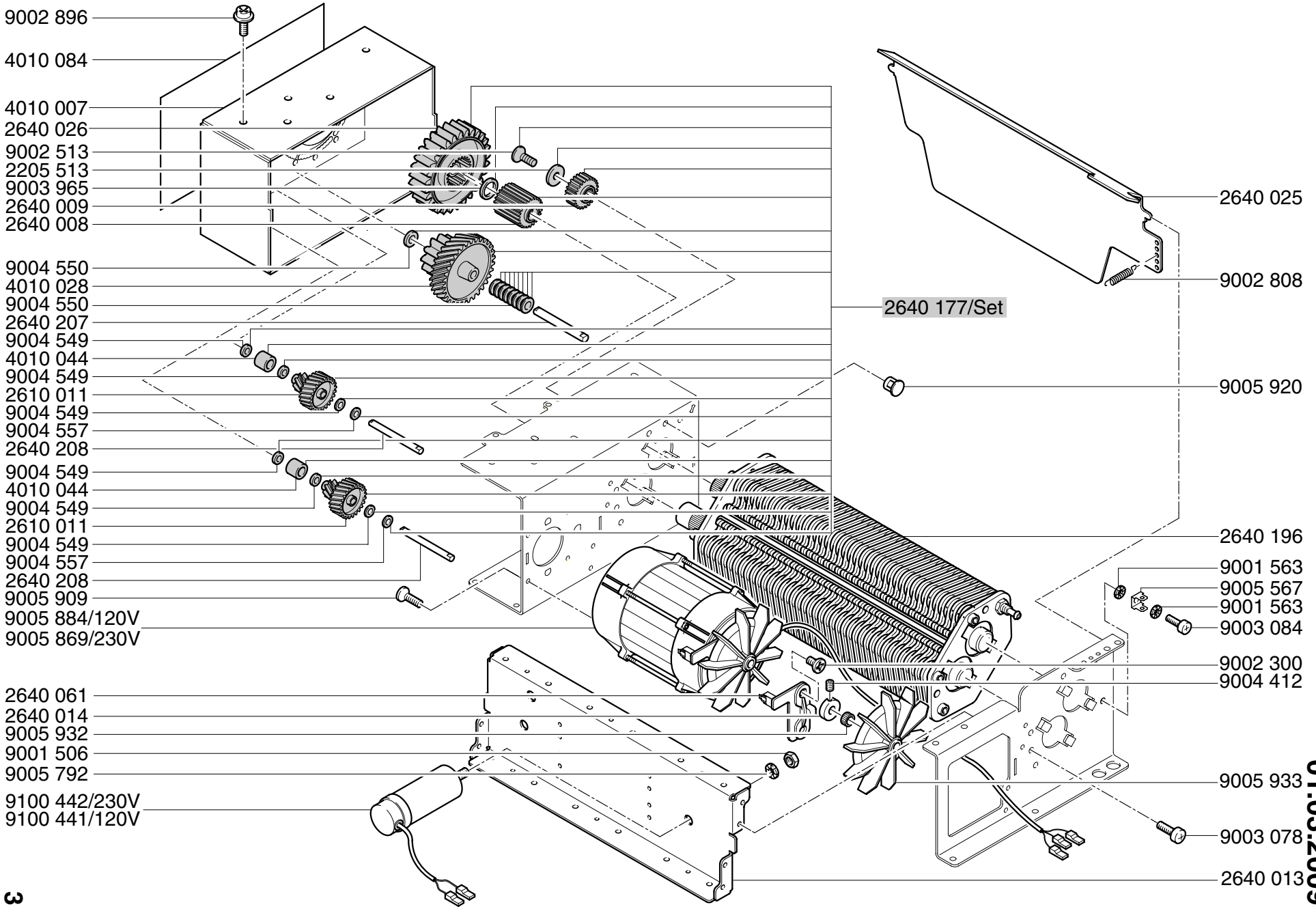

Mod.2604 Oil A

CROSS / CUT 2x15mm

01.03.2009

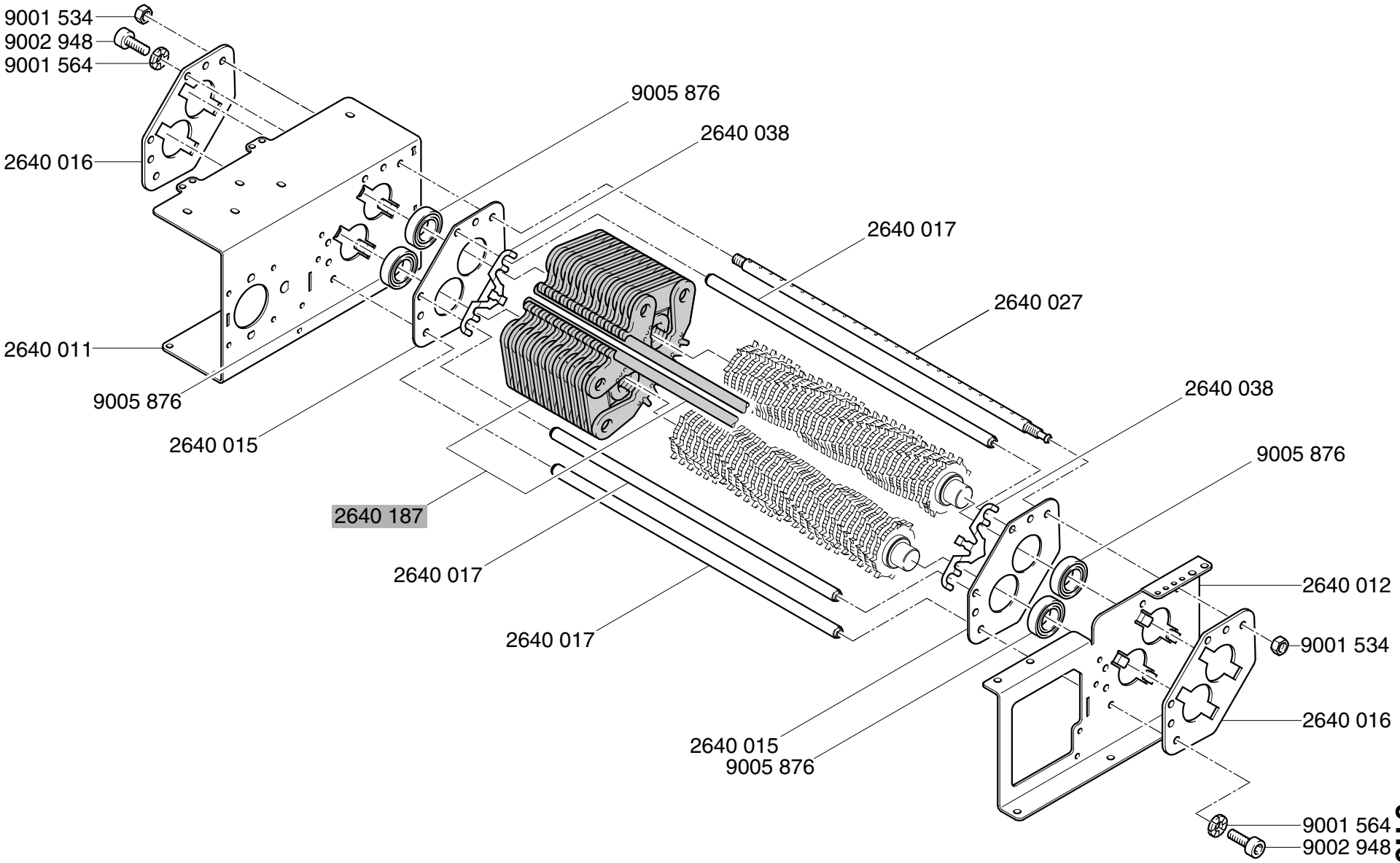

Mod.2604 Oil A

CROSS / CUT 2x15mm

01.03.2009

Mod.2604 Oil A

CROSS / CUT 2x15mm

01.03.2009

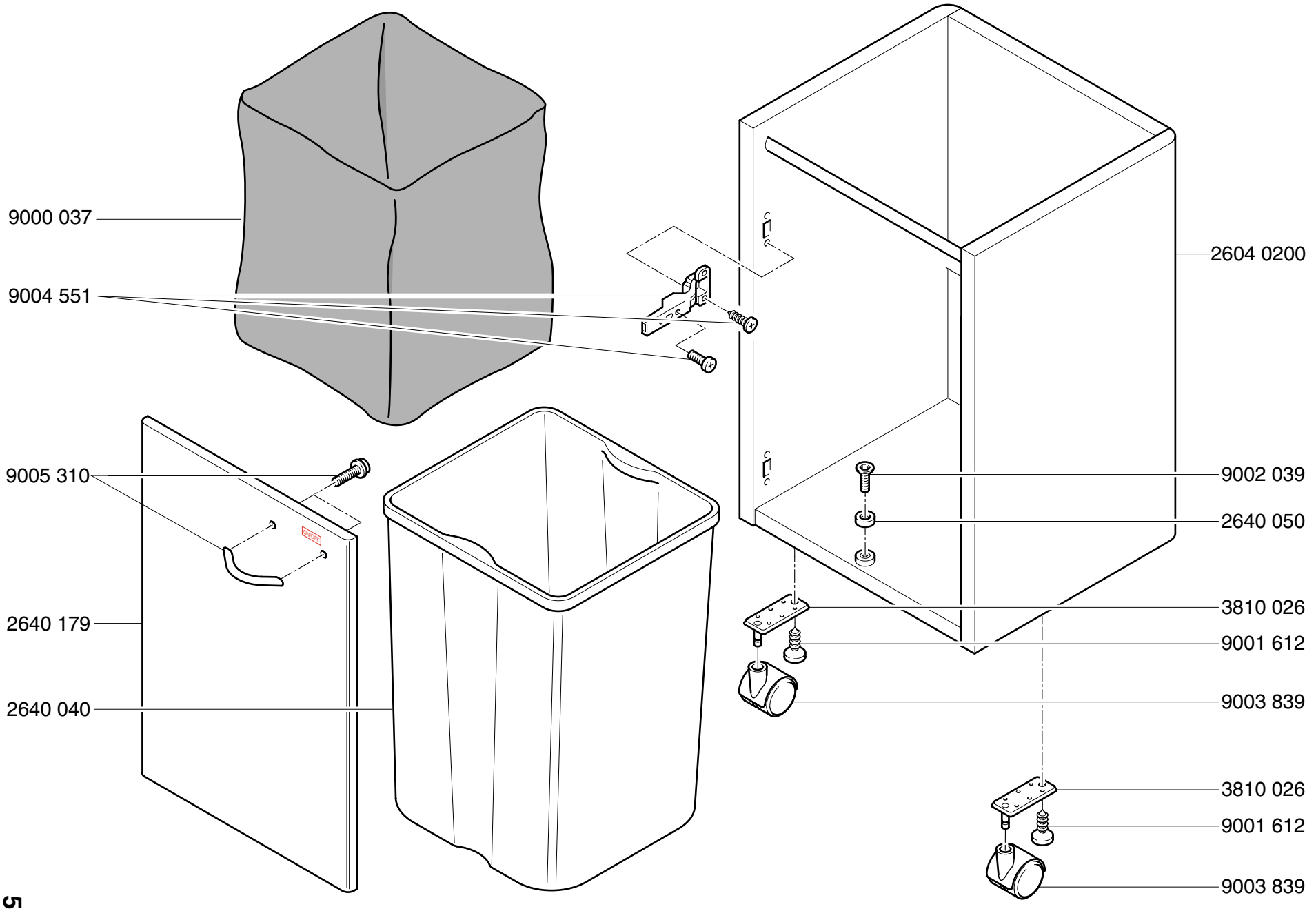

CROSS / CUT 2x15mm

Mod.2604 Oil A

01.03.2009

Anschlußplan 2604 Oil A
Diagramme de branchement 2604 Oil A
Connecting diagram 2604 Oil A

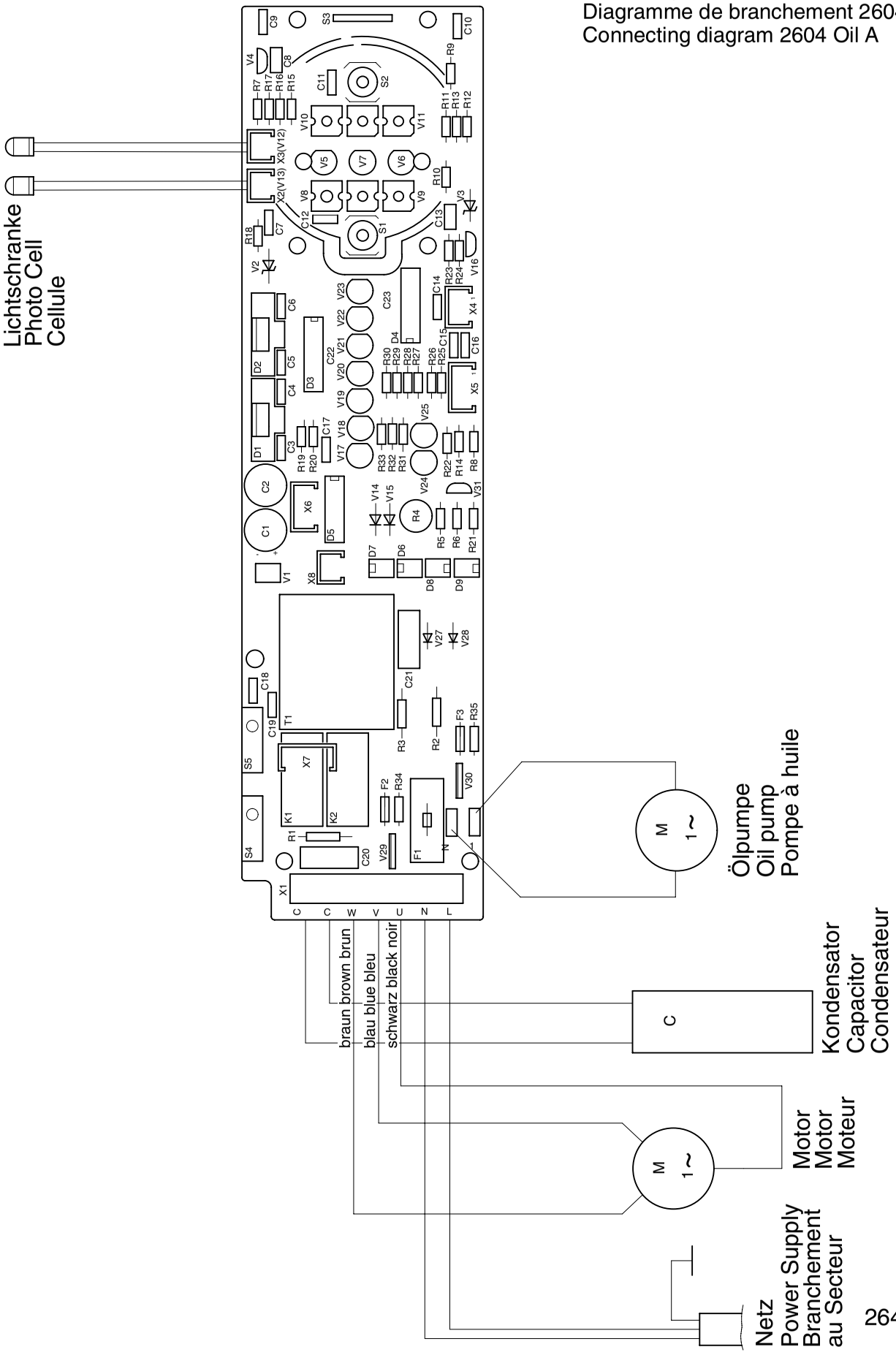

2640 182

CROSS / CUT **2x15mm**

Mod.2604 Oil A

01.03.2009

Stromlaufplan 2604 Oil A
schema de
circuit ectrique 2604 Oil A
wiring diagram 2604 Oil A

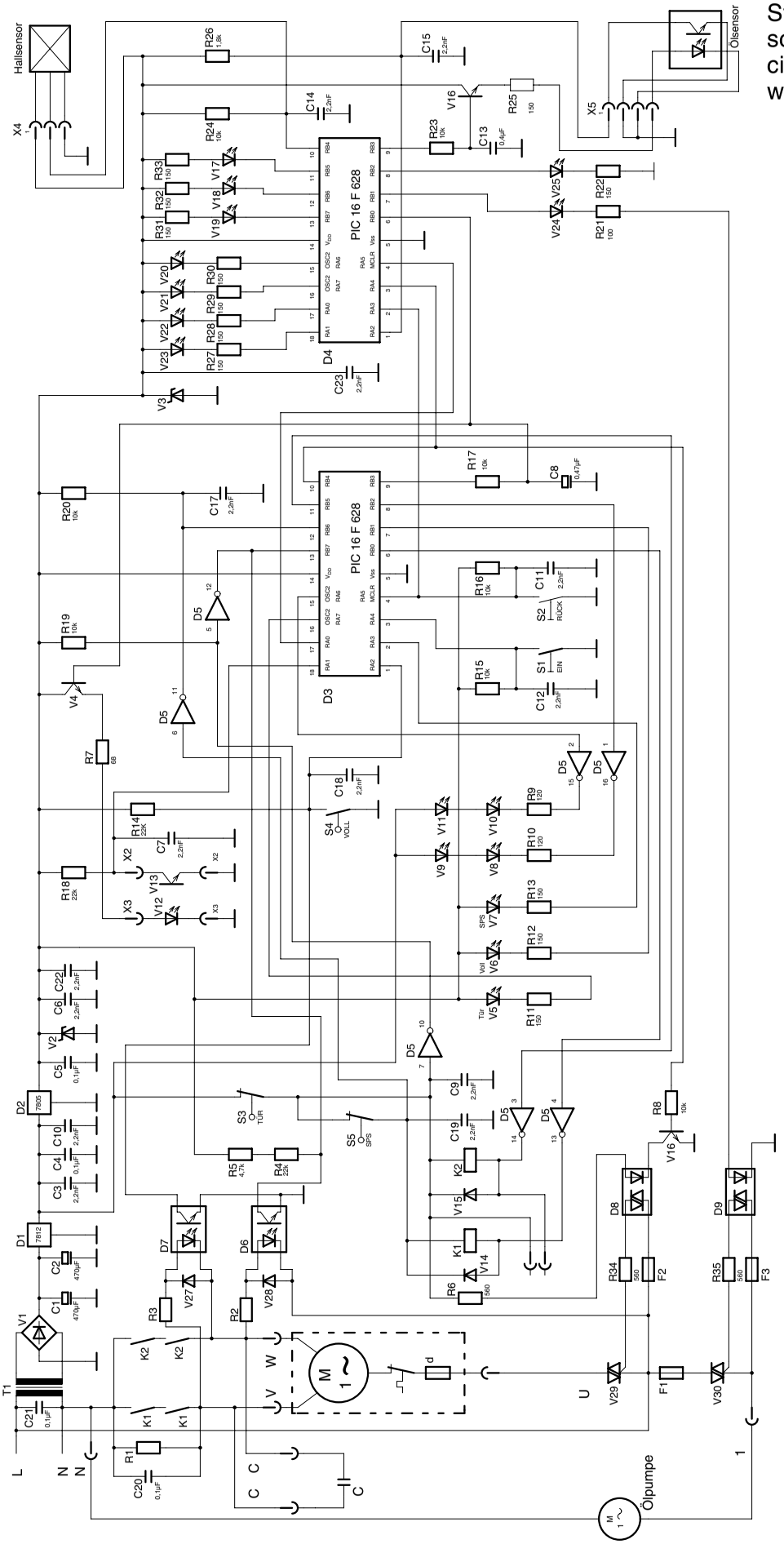

2640 174

Mod.2604 A

01.02.2013

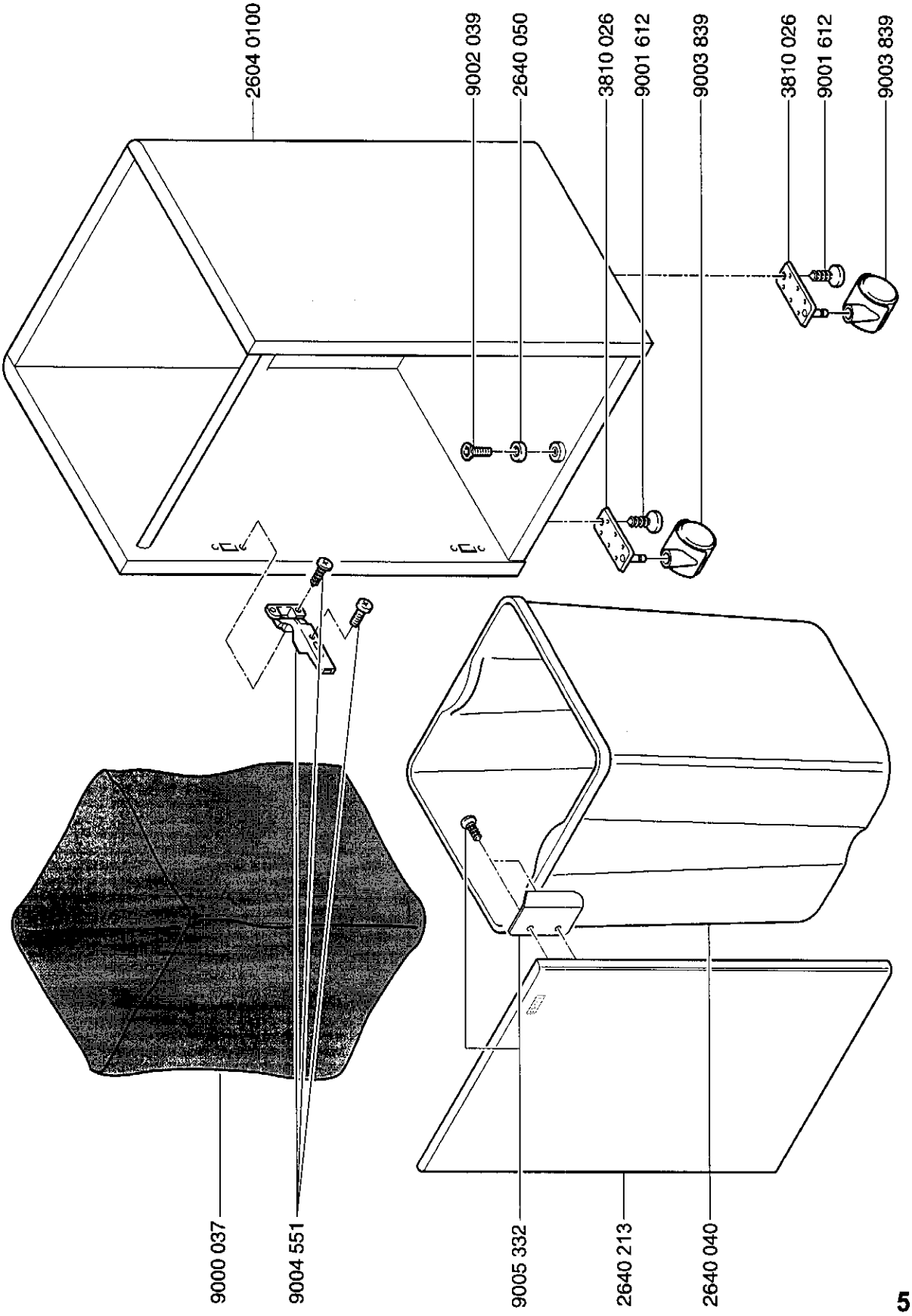

CROSS / CUT 4x40mm

Mod.2604 A

01.02.2013

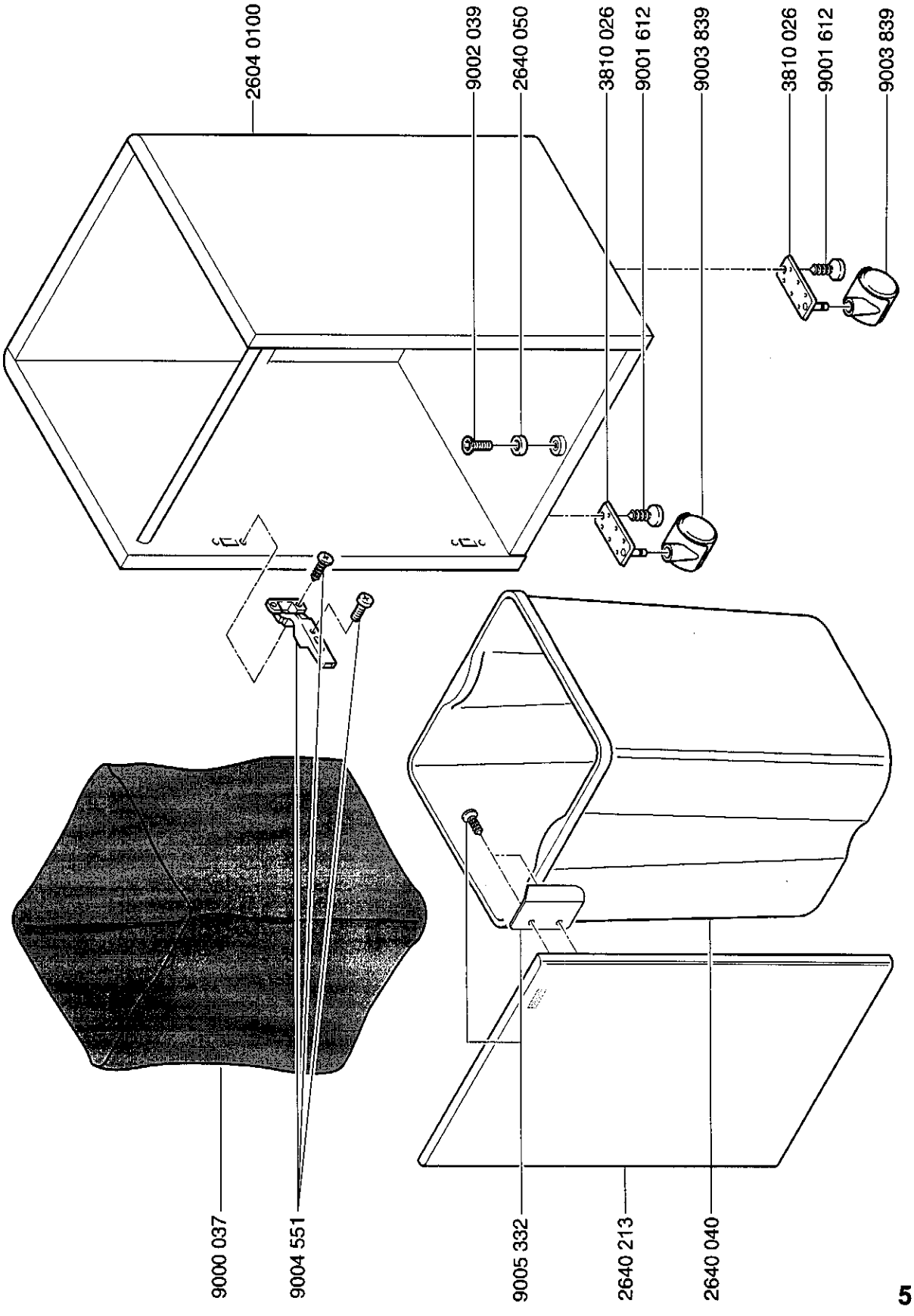

CROSS / CUT 2x15mm

Mod.2604 A

01.02.2013

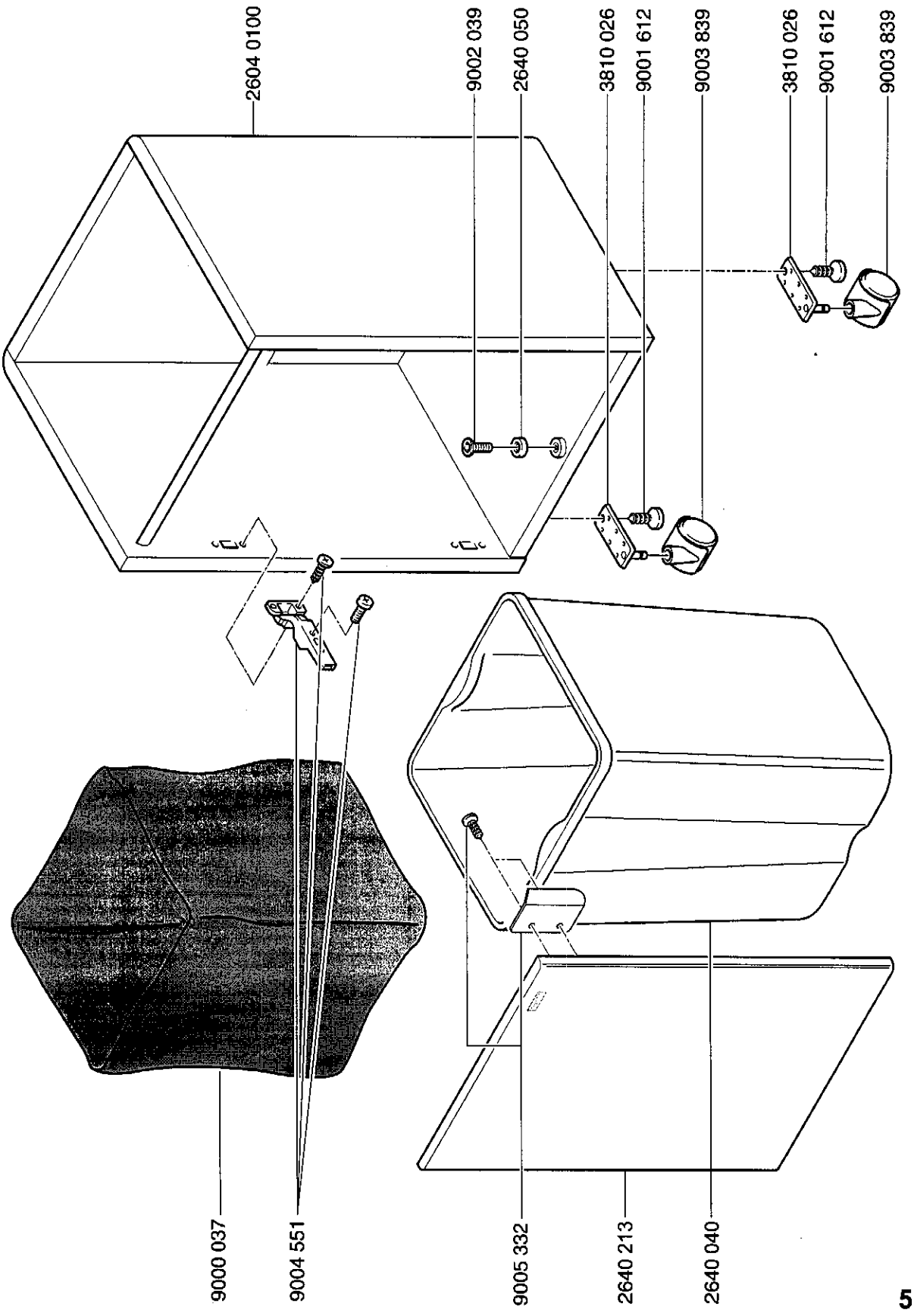

CROSS / CUT 0,8x12mm

Mod.2604 A

01.02.2013

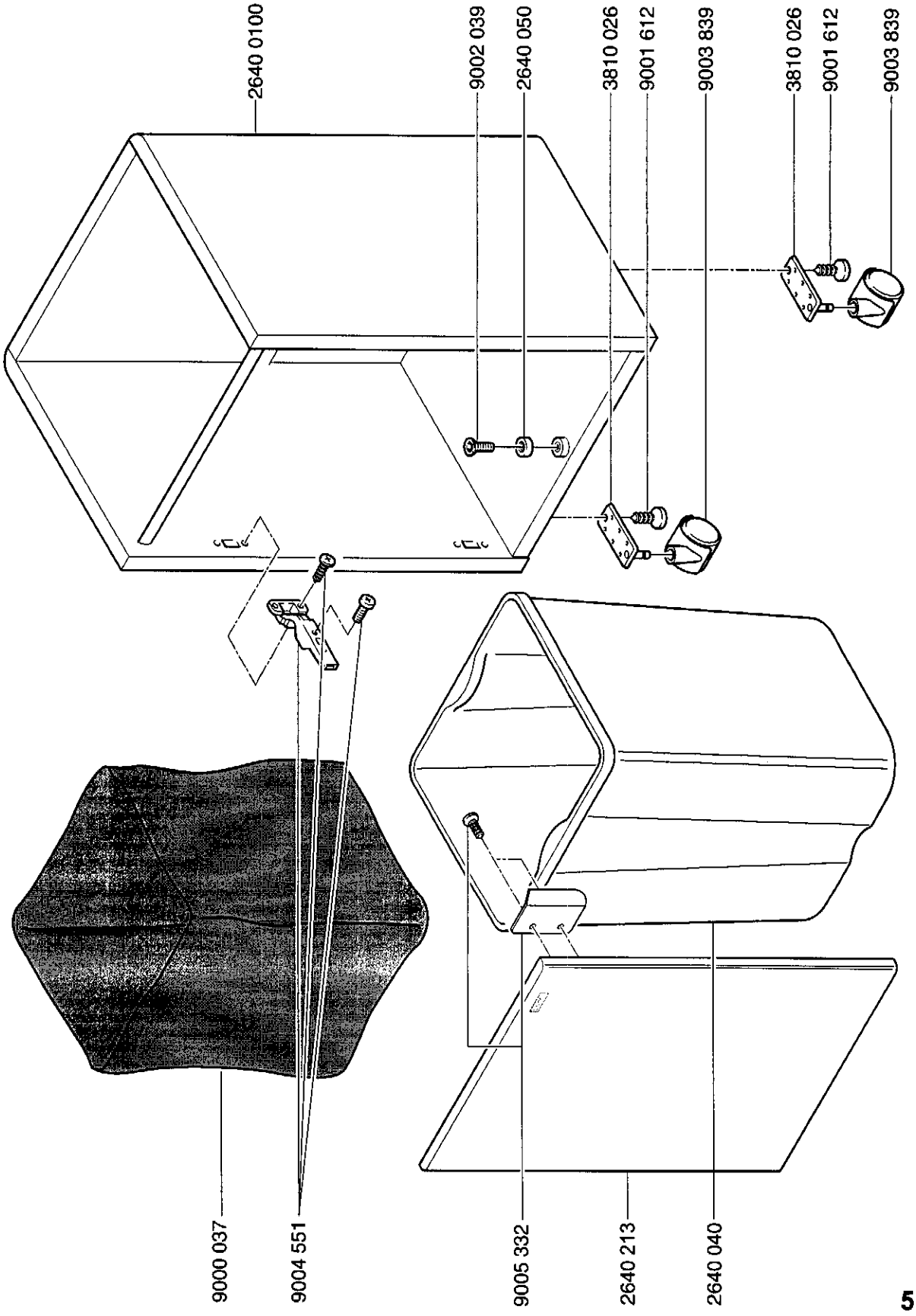

CROSS / CUT 0,8x5mm

Mod.2604 A

01.02.2013

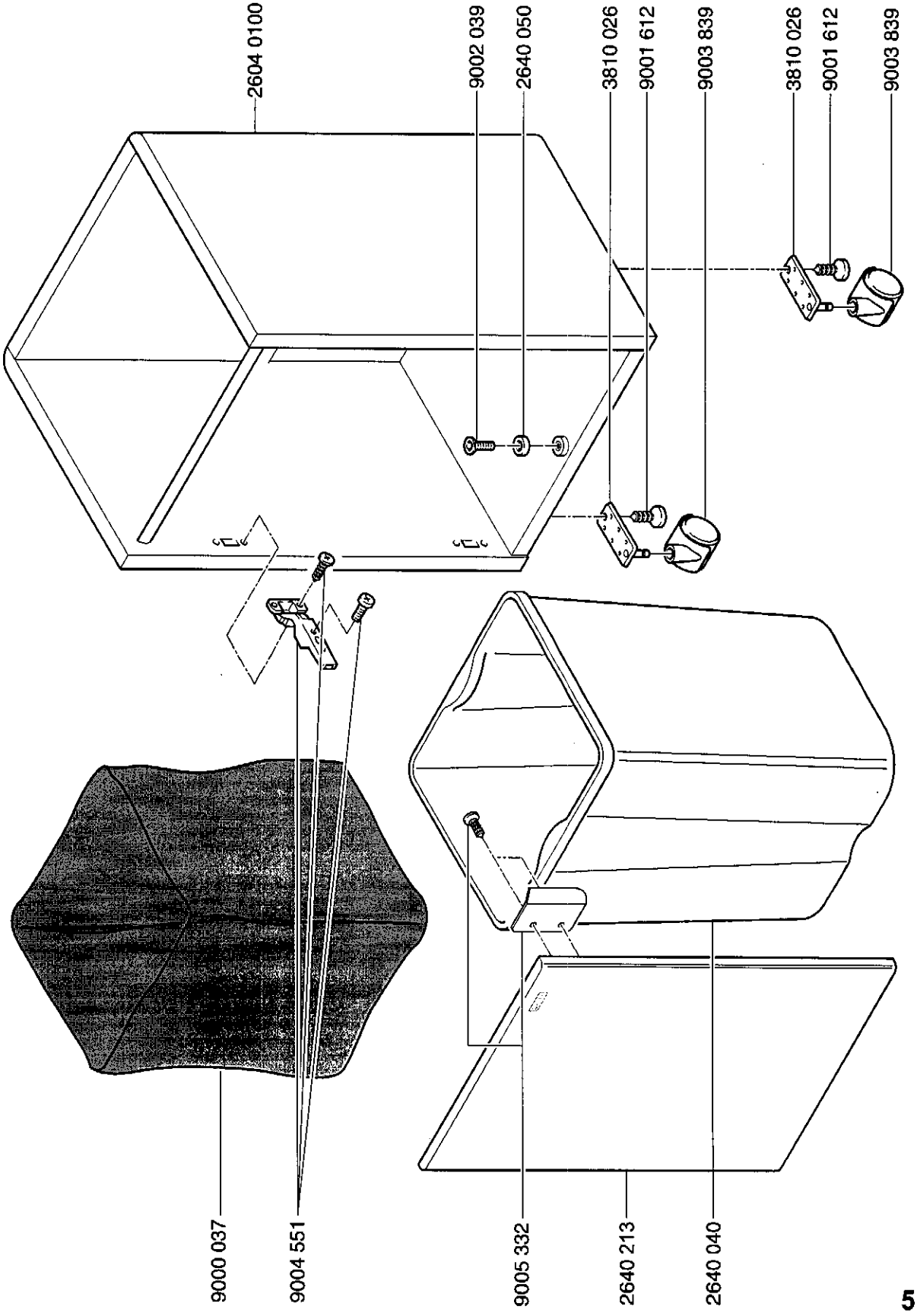

Mod.2604 Oil A

01.02.2013

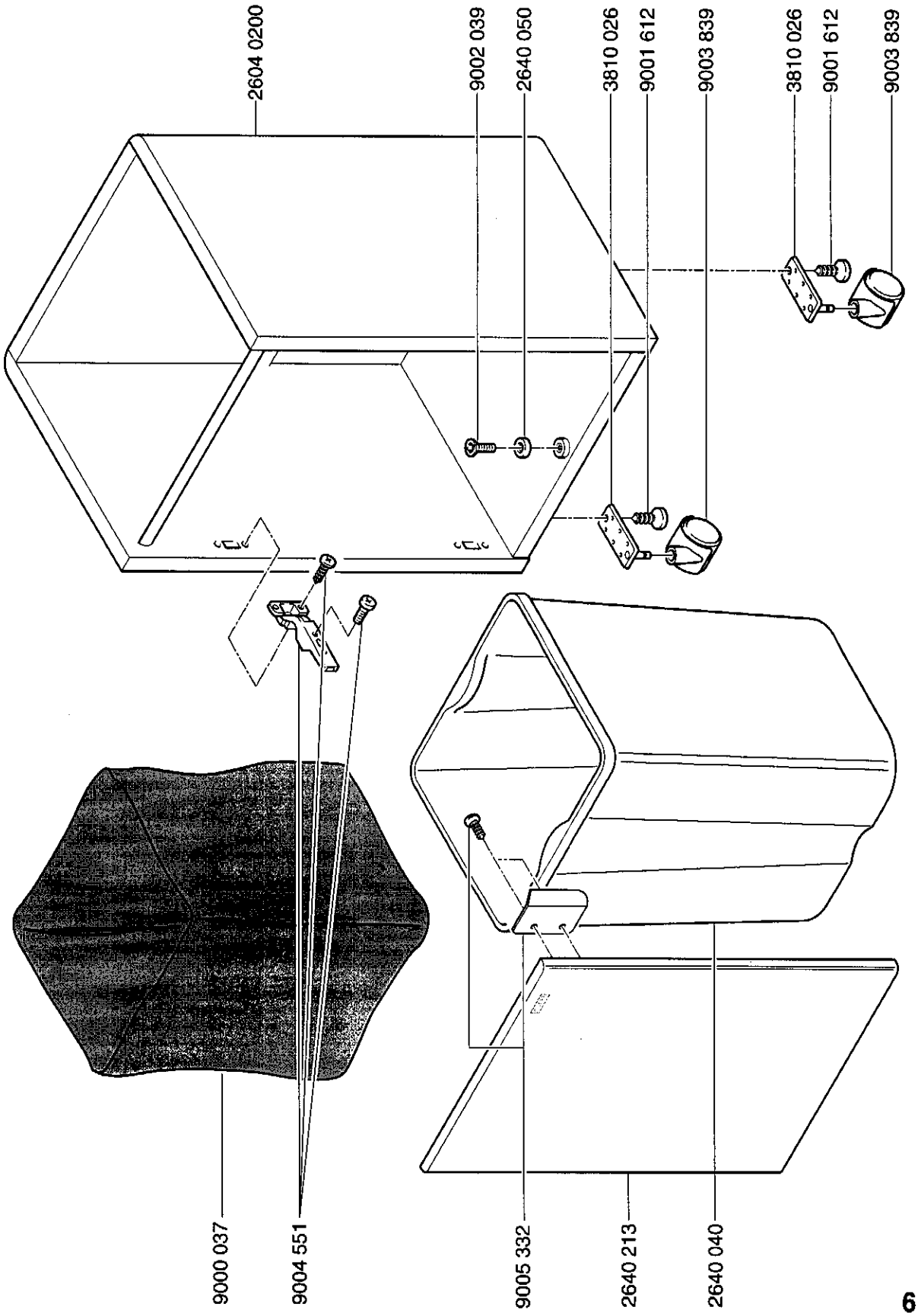

CROSS / CUT 4x40mm

Mod.2604 Oil A

01.02.2013

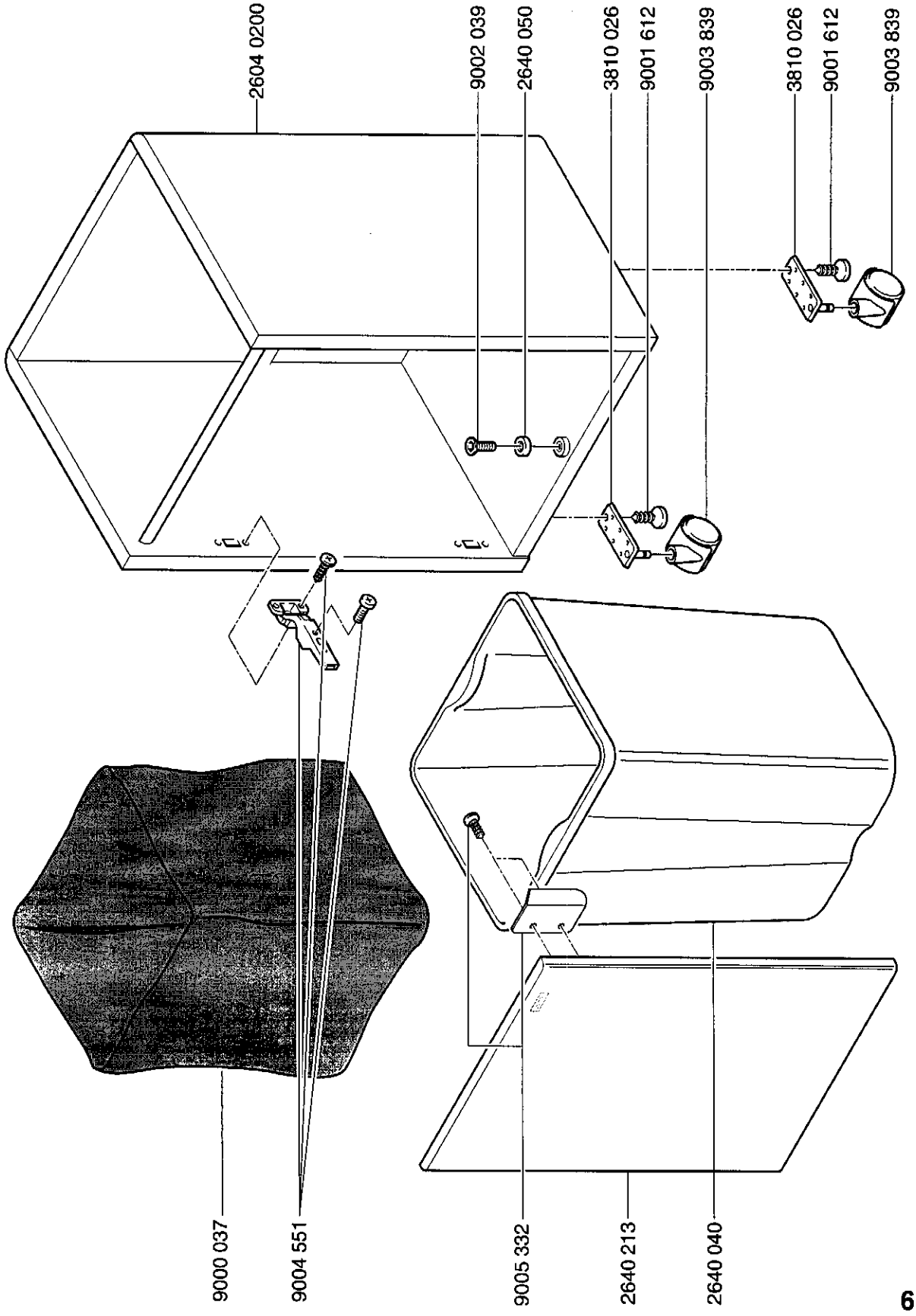

CROSS / CUT 2x15mm

Mod.2604 Oil A

01.02.2013

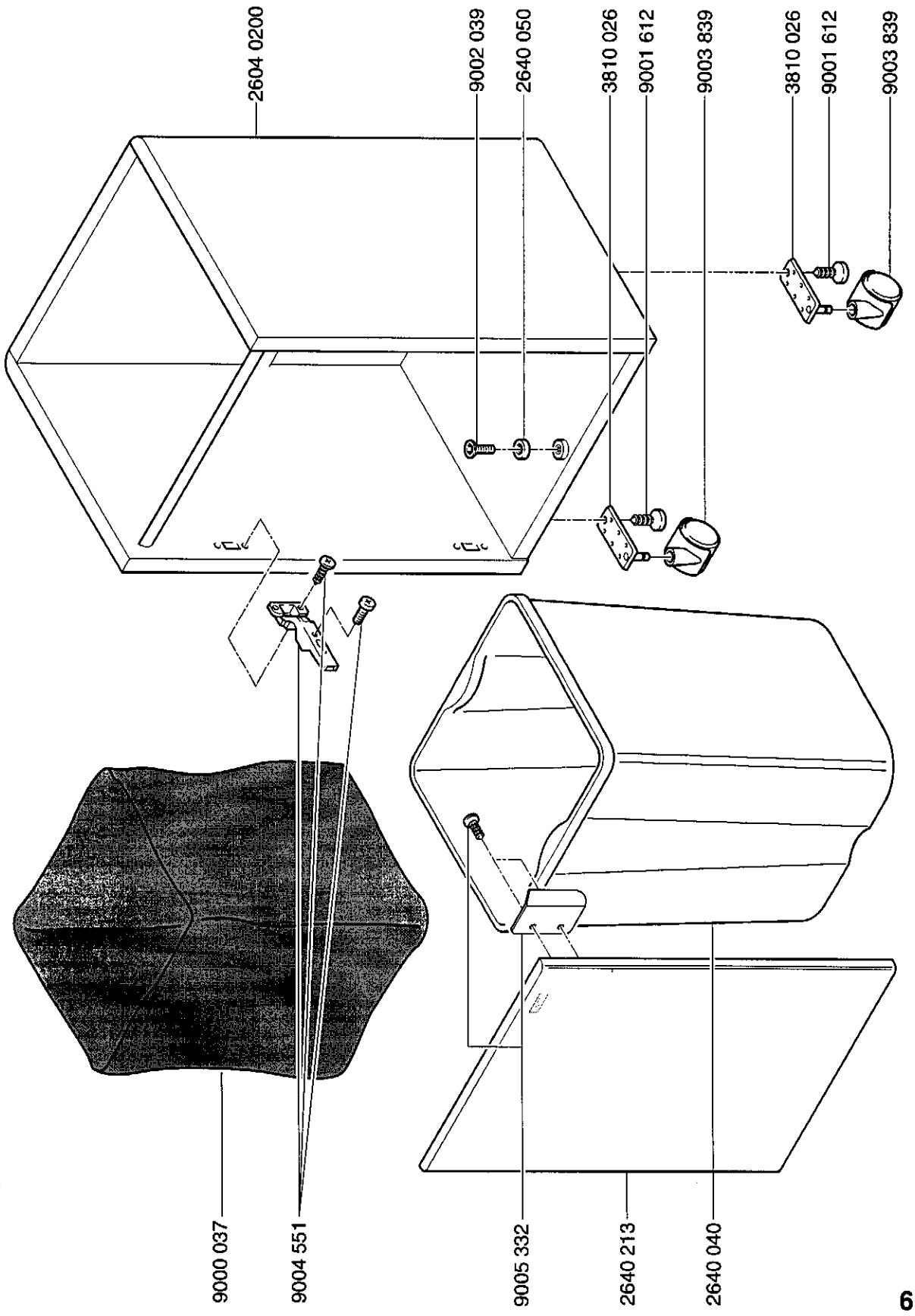

CROSS / CUT 0,8x5mm

Mod.2604 Oil A
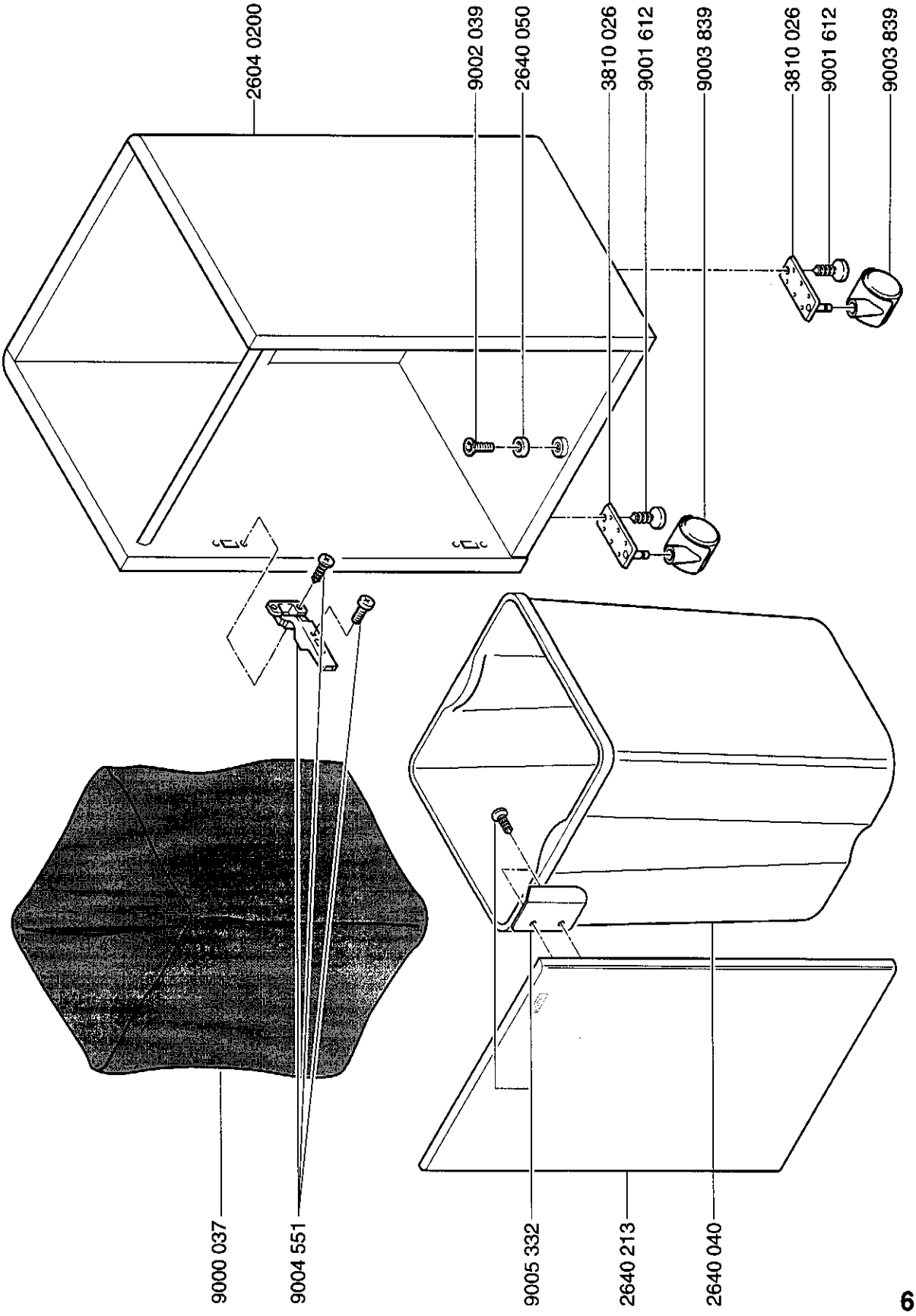
01.02.2013