Digital Cutter
Illustrated Parts Booklet
(7301500)

© GBC Films Group, July 2000
Do not duplicate without written permission

GBC Films Group
4151 Anderson Road
DeForest, WI 53532
Ph: (608) 246 - 8844
Fx: (608) 246 - 8645

Booklet #: DCPB001A

Links to Content

Drawing number :	Drawing Title:	Page number:
DC - 001	Assembly listings	1 - 1
DC - 002	Cutting head assembly	1 - 2
DC - 003	Right side components	1 - 3
DC - 004	Left side components	1 - 4
DC - 005	Shield and covers	1 - 5
DC - 006	Catch table	1 - 6
DC - 007	Optional rewind assembly	1 - 7
DC - 008	Hold finger assembly	1 - 8
DC - 009	Upper feed roller assembly	1 - 9
DC - 010	Lower feed lower assembly	1 - 10
DC - 011	Upper feed slitter idler	1 - 11
DC - 012	Lower feed slitter idler	1 - 12
DC - 013	Feed web idler	1 - 13
DC - 014	Shortage bar assembly	1 - 14
DC - 015	Rotary cutting head unit	1 - 15
DC - 016	Optical sensor assembly	1 - 16
DC - 017	Crop mark reader assembly	1 - 17
DC - 018	Cutting head sensor	1 - 18
DC - 019	Rewind drive assembly	1 - 19
DC - 020	Rewind shaft assembly	1 - 20
DC - 021	Safety shield assembly	1 - 21

© GBC Films Group July 2000

Drawing number :	Drawing Title:	Page number:

This page intentionally left blank.

PROPRIETARY

GBC PRO-TECH CLAIMS PROPRIETARY RIGHTS TO THE MATERIAL DISCLOSED ON THIS DRAWING. IT IS ISSUED IN CONFIDENCE FOR ENGINEERING INFORMATION ONLY AND SHALL NOT BE REPRODUCED, COPIED OR DISCLOSED IN WHOLE OR IN PART, OR USED FOR MANUFACTURE OR FOR ANY OTHER PURPOSE WITHOUT WRITTEN PERMISSION FROM GBC PRO-TECH

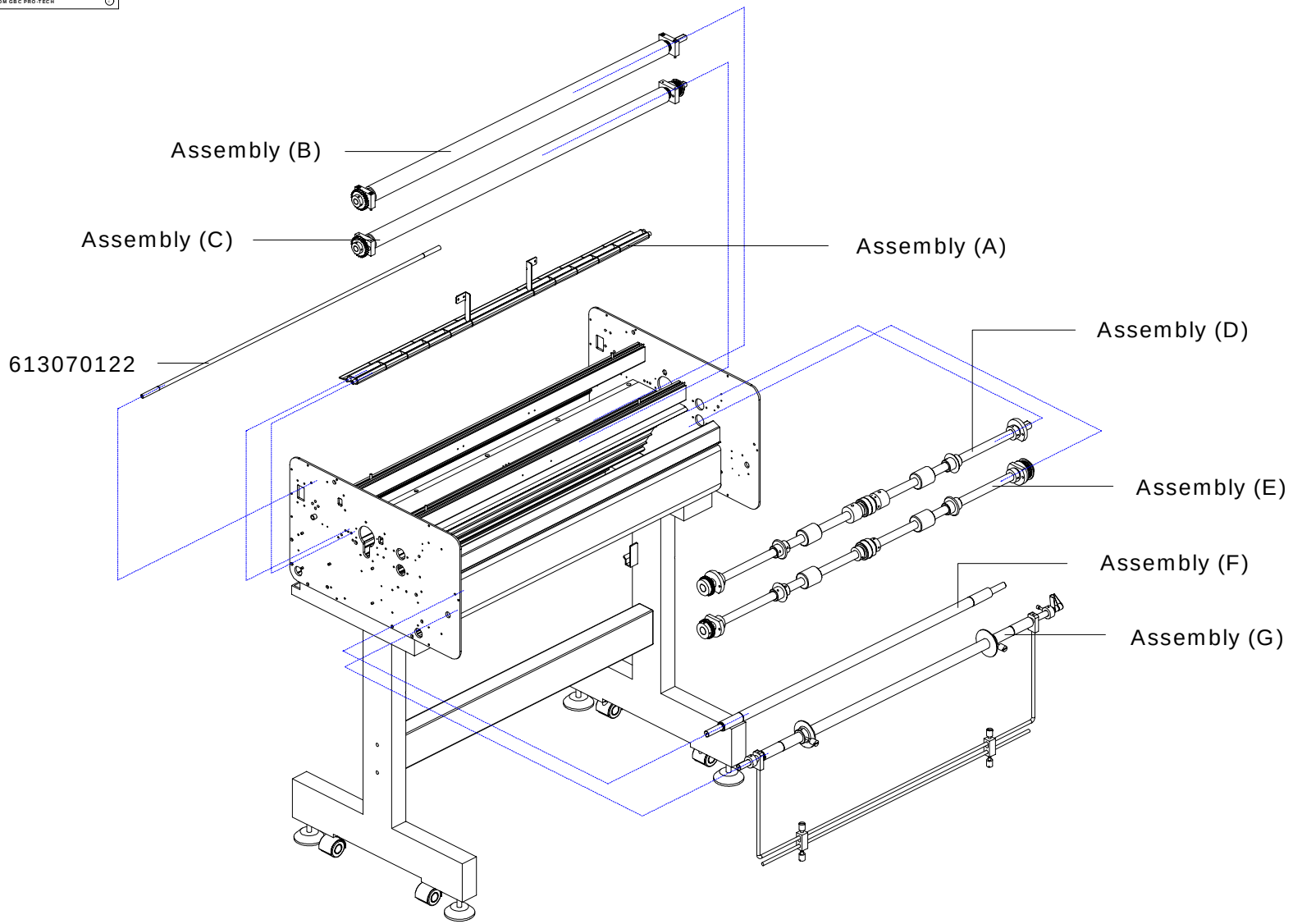

ORIGINATOR : GMP
CHECKED BY : GBC FILMS GROUP
REVISION

This print is the property of GBC Films Group. The information thereon is remitted in confidence.

UNLESS OTHERWISE SPECIFIED TOLERANCE

DIM. AS SHOWN	TOL.
X/X	± 1/64
X	± .050
XX	± .010
XXX	± .020
XXXX	± .005

FINISH TO BE 125 √

ANGLES ± 1/2°

GBC Films Group
4151 Anderson Road, DeForest, WI 53532

TITLE :
Digital Cutter: Assembly list

DATE :	DRAWN BY :	DWG SCALE :	DWG :
07/12/00	N/A	N/A	DC - 001

© GBC Films Group July 2000

PROPRIETARY

GBC PRO-TECH CLAIMS PROPRIETARY RIGHTS TO THE MATERIAL DISCLOSED ON THIS DRAWING. IT IS ISSUED IN CONFIDENCE FOR ENGINEERING INFORMATION ONLY AND SHALL NOT BE REPRODUCED, COPIED OR DISCLOSED IN WHOLE OR IN PART, OR USED FOR MANUFACTURE OR FOR ANY OTHER PURPOSE WITHOUT WRITTEN PERMISSION FROM GBC PRO-TECH

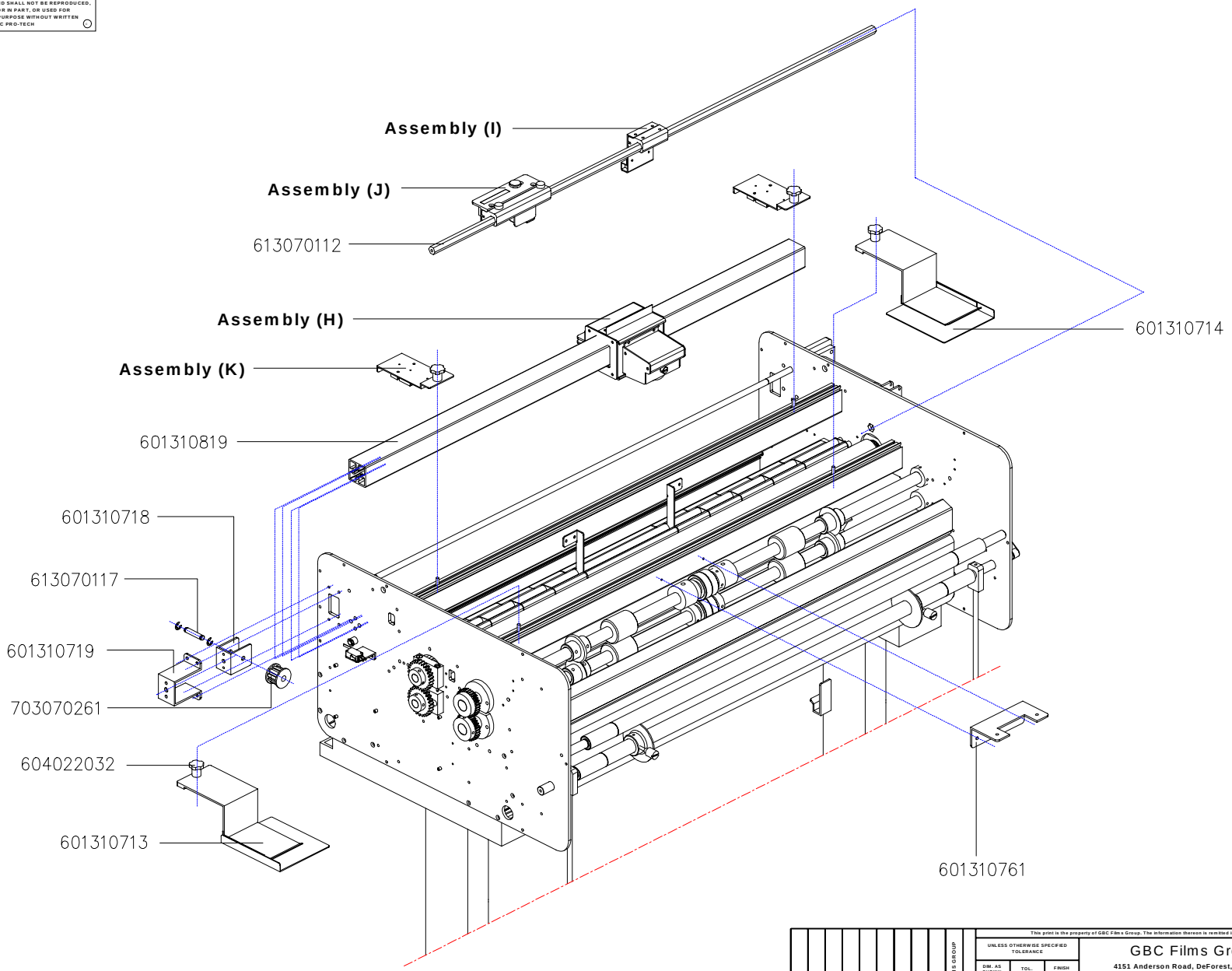

This print is the property of GBC Films Group. The information thereon is remitted in confidence.

UNLESS OTHERWISE SPECIFIED TOLERANCE

DIM. AS SHOWN	TOL.
X/X	±.1/64
X	±.050
XX	±.010
XXX	±.020
XXXX	±.005

FINISH TO BE 125 √

ANGLES ±1/2°

GBC Films Group
4151 Anderson Road, DeForest, WI 53532

TITLE :
Digital Cutter: Cutting head assembly

DATE :	DRAWN BY :	DWG SCALE :	DWG :
07/13/00	N/A	N/A	DC - 002

DRIGINATOR: CAMP
CHECKED BY : GBC FILMS GROUP
REVISION

© GBC Films Group July 2000

PROPRIETARY

GBC PRO-TECH CLAIMS PROPRIETARY RIGHTS TO THE MATERIAL DISCLOSED ON THIS DRAWING. IT IS ISSUED IN CONFIDENCE FOR ENGINEERING INFORMATION ONLY AND SHALL NOT BE REPRODUCED, COPIED OR DISCLOSED IN WHOLE OR IN PART, OR USED FOR MANUFACTURE OR FOR ANY OTHER PURPOSE WITHOUT WRITTEN PERMISSION FROM GBC PRO-TECH

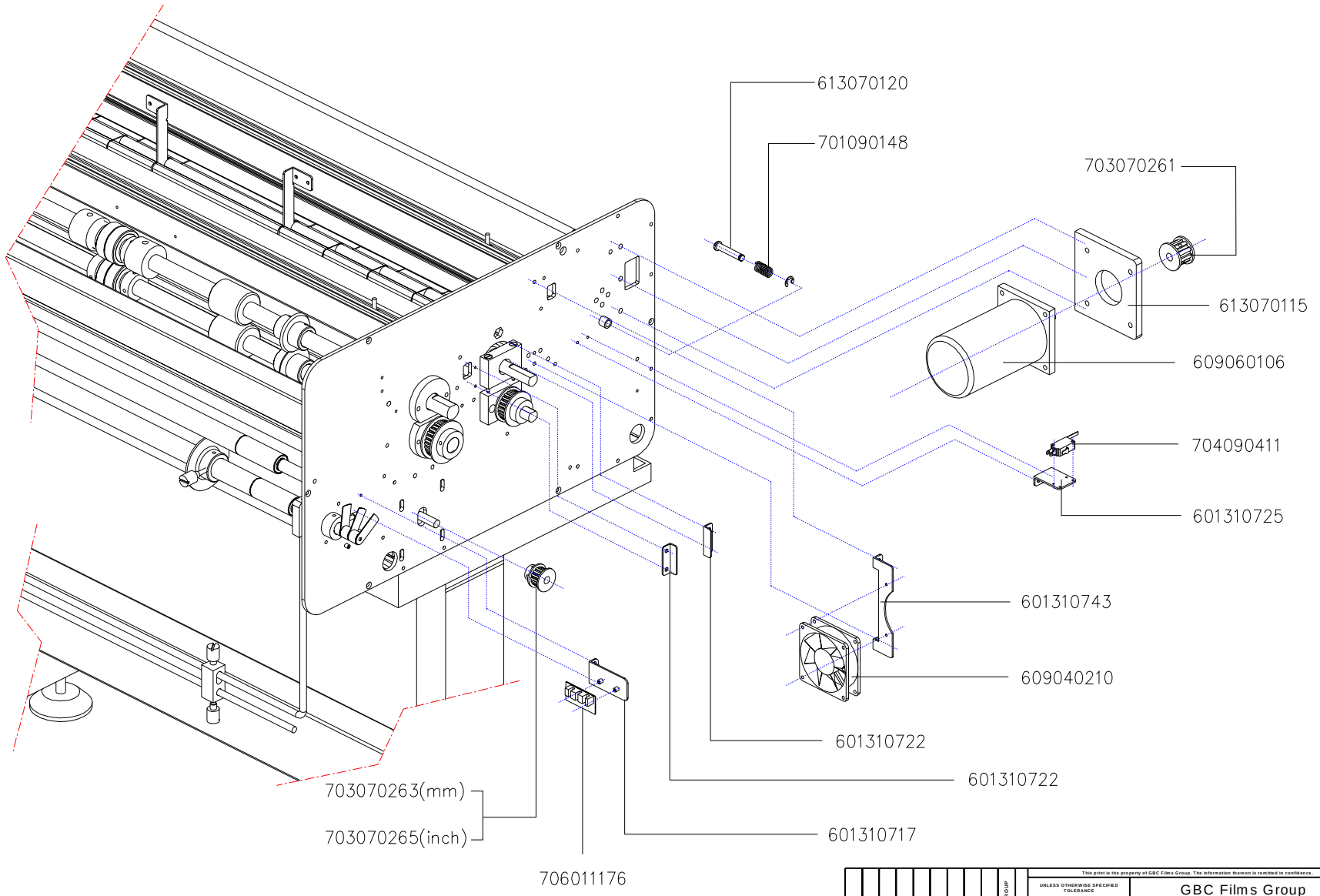

ORIGINATOR : GMP
CHECKED BY : GBC FILMS GROUP
REVISION

This print is the property of GBC Films Group. The information thereon is remitted in confidence.

UNLESS OTHERWISE SPECIFIED TOLERANCE

DIM. AS SHOWN	TOL.
X/X	±.1/64
X	±.050
XX	±.010
XXX	±.020
XXXX	±.005

FINISH TO BE 125 √

ANGLES ±1°

GBC Films Group
4151 Anderson Road, DeForest, WI 53532

TITLE :
Digital Cutter: Right side components

DATE :	DRAWN BY :	DWG SCALE :	DWG :
07/13/00	N/A	N/A	DC - 003

PROPRIETARY

GBC PRO-TECH CLAIMS PROPRIETARY RIGHTS TO THE MATERIAL DISCLOSED ON THIS DRAWING. IT IS ISSUED IN CONFIDENCE FOR ENGINEERING INFORMATION ONLY AND SHALL NOT BE REPRODUCED, COPIED OR DISCLOSED IN WHOLE OR IN PART, OR USED FOR MANUFACTURE OR FOR ANY OTHER PURPOSE WITHOUT WRITTEN PERMISSION FROM GBC PRO-TECH

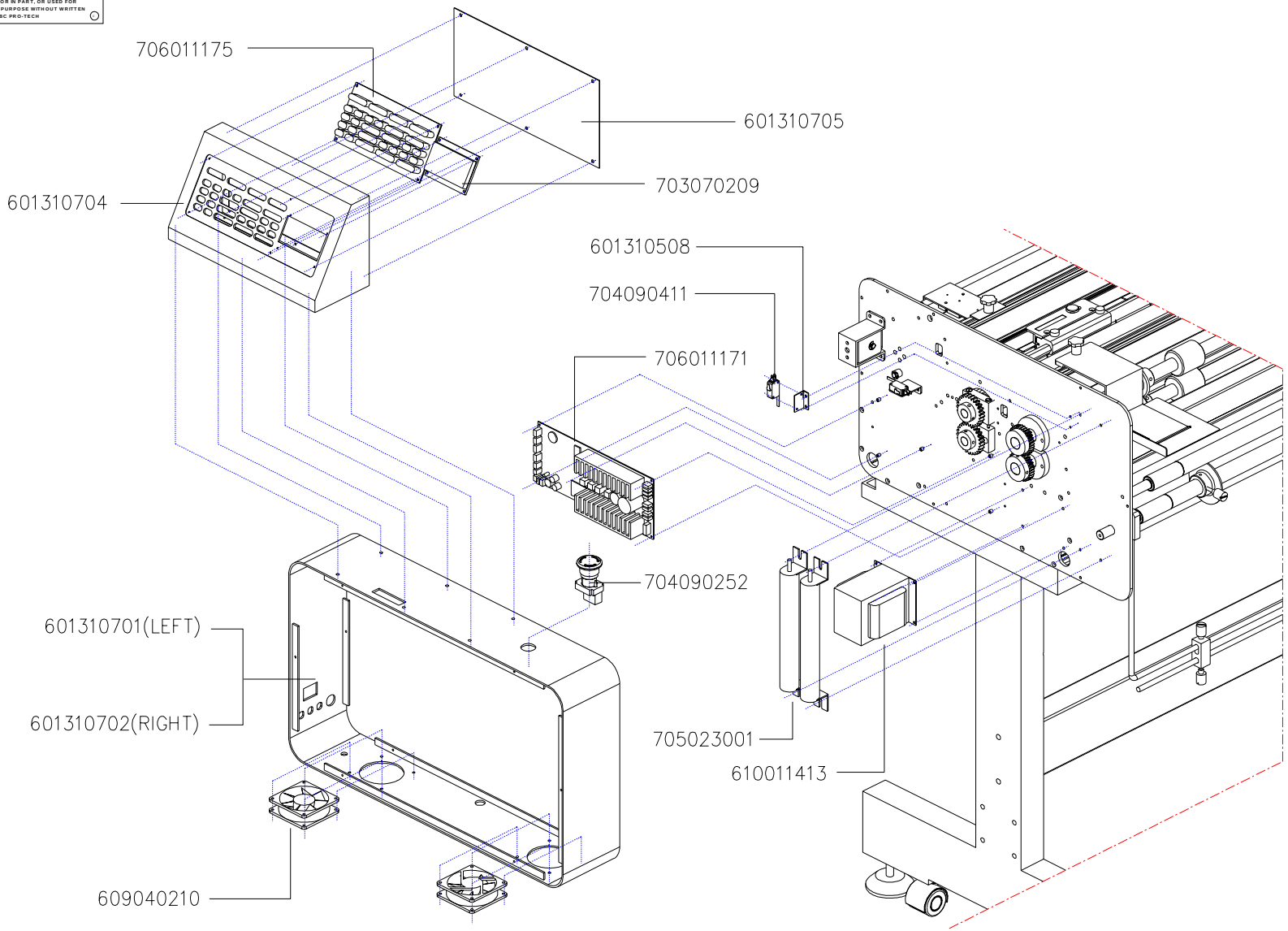

This print is the property of GBC Films Group. The information thereon is remitted in confidence.

UNLESS OTHERWISE SPECIFIED TOLERANCE	
DIM. AS SHOWN	TOL.
X/X	±.164
X	±.050
XX	±.010
XXX	±.020
XXXX	±.005
FINISH TO BE	125 √
ANGLES ±1D	

GBC Films Group
4151 Anderson Road, DeForest, WI 53532

TITLE :
Digital Cutter: Left side components

DATE :	DRAWN BY :	DWG SCALE :	DWG :
07/13/00	N/A	N/A	DC - 003

ORIGINATOR: CAMP
CHECKED BY : GBC FILMS GROUP
REVISION

© GBC Films Group July 2000

PROPRIETARY

GBC PRO-TECH CLAIMS PROPRIETARY RIGHTS TO THE MATERIAL DISCLOSED ON THIS DRAWING. IT IS ISSUED IN CONFIDENCE FOR ENGINEERING INFORMATION ONLY AND SHALL NOT BE REPRODUCED, COPIED OR DISCLOSED IN WHOLE OR IN PART, OR USED FOR MANUFACTURE OR FOR ANY OTHER PURPOSE WITHOUT WRITTEN PERMISSION FROM GBC PRO-TECH

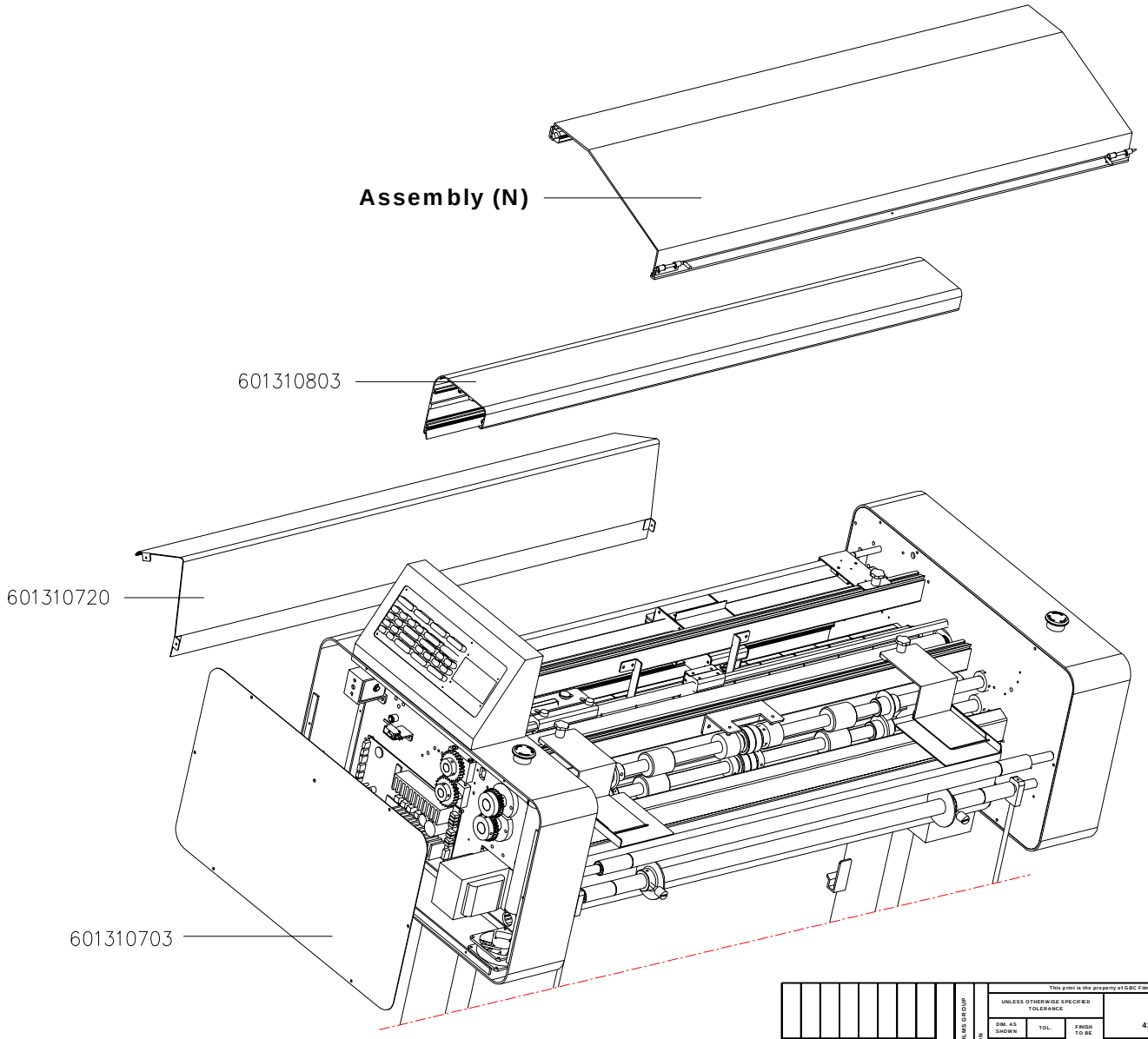

ORIGINATOR : GMP
CHECKED BY : GBC FILMS GROUP
REVISION

This print is the property of GBC Films Group. The information thereon is remitted in confidence.

UNLESS OTHERWISE SPECIFIED TOLERANCE

DIM. AS SHOWN	TOL.
X/X	±.1/64
X	±.050
XX	±.010
XXX	±.020
XXXX	±.005

FINISH TO BE 125 √

ANGLES ±.10

GBC Films Group
4151 Anderson Road, DeForest, WI 53532

TITLE : Digital Cutter: Covers and shield

DATE :	DRAWN BY :	DWG SCALE :	DWG :
07/13/00	N/A	N/A	DC - 005

© GBC Films Group July 2000

PROPRIETARY

GBC PRO-TECH CLAIMS PROPRIETARY RIGHTS TO THE MATERIAL DISCLOSED ON THIS DRAWING. IT IS ISSUED IN CONFIDENCE FOR ENGINEERING INFORMATION ONLY AND SHALL NOT BE REPRODUCED, COPIED OR DISCLOSED IN WHOLE OR IN PART, OR USED FOR MANUFACTURE OR FOR ANY OTHER PURPOSE WITHOUT WRITTEN PERMISSION FROM GBC PRO-TECH

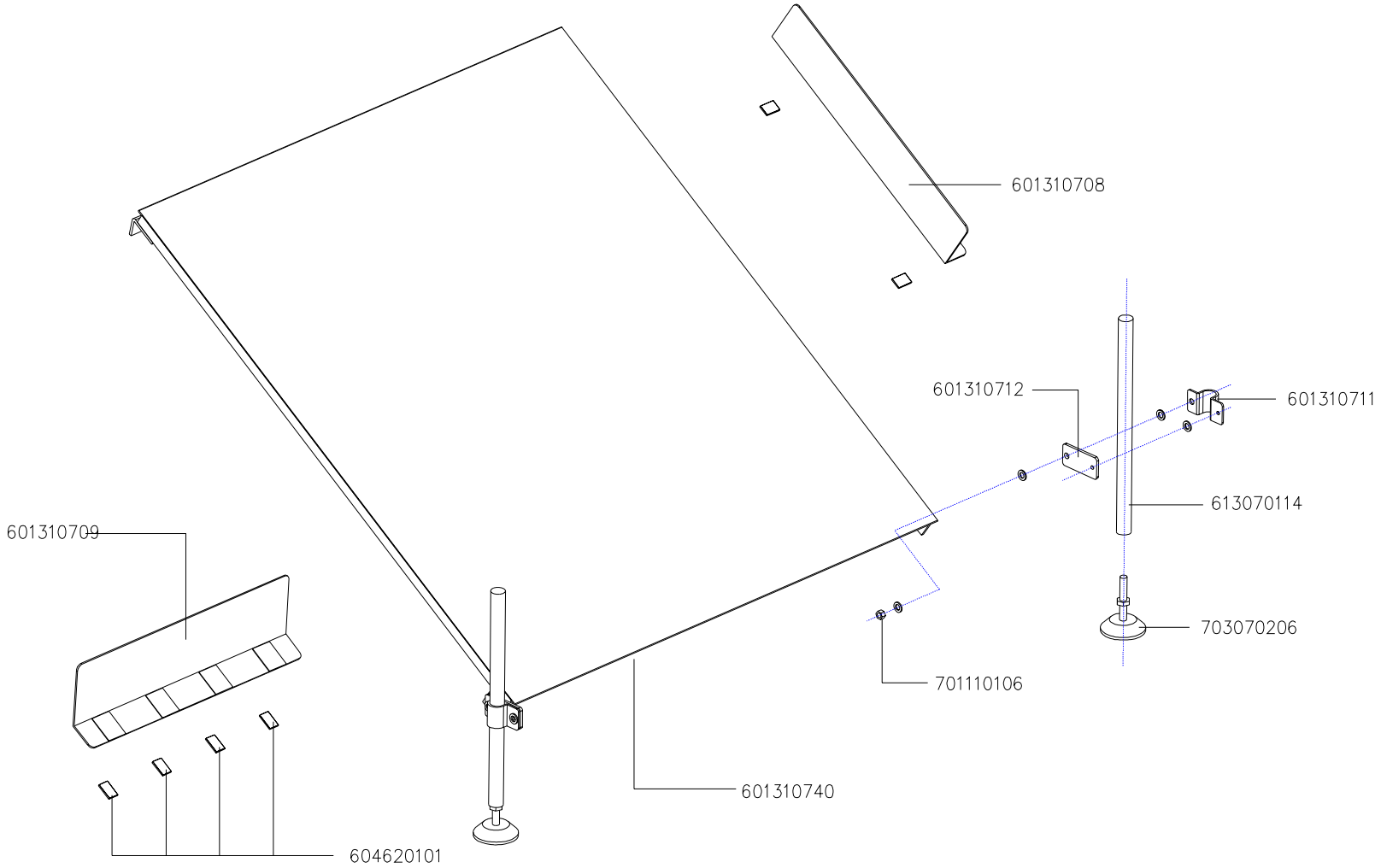

This print is the property of GBC Films Group. The information thereon is remitted in confidence.

UNLESS OTHERWISE SPECIFIED TOLERANCE		FINISH TO BE	GBC Films Group 4151 Anderson Road, DeForest, WI 53532			
DIM. AS SHOWN	TOL.	125 √	TITLE : Digital Cutter: Catch table			
X/X	± .1/64					
X	± .050					
XX	± .010					
XXX	± .020	ANGLES ± 1/2	DATE : 07/13/00	DRAWN BY : N/A	DWG SCALE : N/A	DWG : DC - 006
XXXX	± .005					

ORIGINATOR: CMP | CHECKED BY: GBC FILMS GROUP | REVISION

© GBC Films Group July 2000

PROPRIETARY

GBC PRO-TECH CLAIMS PROPRIETARY RIGHTS TO THE MATERIAL DISCLOSED ON THIS DRAWING. IT IS ISSUED IN CONFIDENCE FOR ENGINEERING INFORMATION ONLY AND SHALL NOT BE REPRODUCED, COPIED OR DISCLOSED IN WHOLE OR IN PART, OR USED FOR MANUFACTURE OR FOR ANY OTHER PURPOSE WITHOUT WRITTEN PERMISSION FROM GBC PRO-TECH

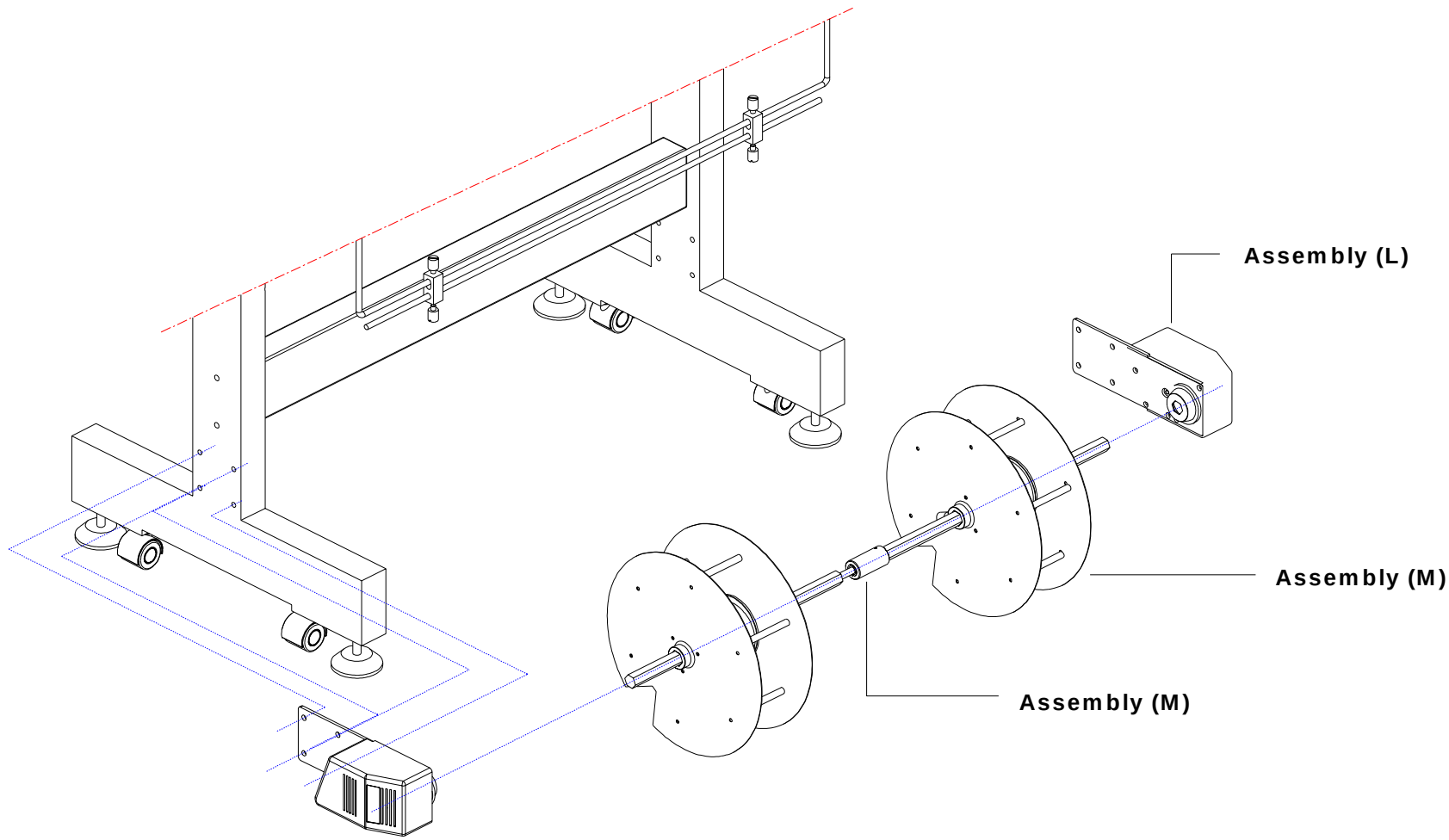

This print is the property of GBC Films Group. The information thereon is remitted in confidence.

ORIGINATOR : GMP	CHECKED BY : GBC FILMS GROUP	REVISION	

UNLESS OTHERWISE SPECIFIED TOLERANCE		
DIM. AS SHOWN	TOL.	FINISH TO BE
X/X	±1/64	125 √
X	±.050	
XX	±.010	
XXX	±.020	ANGLES ±1D
XXXX	±.005	

GBC Films Group
4151 Anderson Road, DeForest, WI 53532

TITLE :
Digital Cutter: Rewind option assembly

DATE :	DRAWN BY :	DWG SCALE :	DWG :
07/13/00	N/A	N/A	DC - 007

PROPRIETARY

GBC PRO-TECH CLAIMS PROPRIETARY RIGHTS TO THE MATERIAL DISCLOSED ON THIS DRAWING. IT IS ISSUED IN CONFIDENCE FOR ENGINEERING INFORMATION ONLY AND SHALL NOT BE REPRODUCED, COPIED OR DISCLOSED IN WHOLE OR IN PART, OR USED FOR MANUFACTURE OR FOR ANY OTHER PURPOSE WITHOUT WRITTEN PERMISSION FROM GBC PRO-TECH

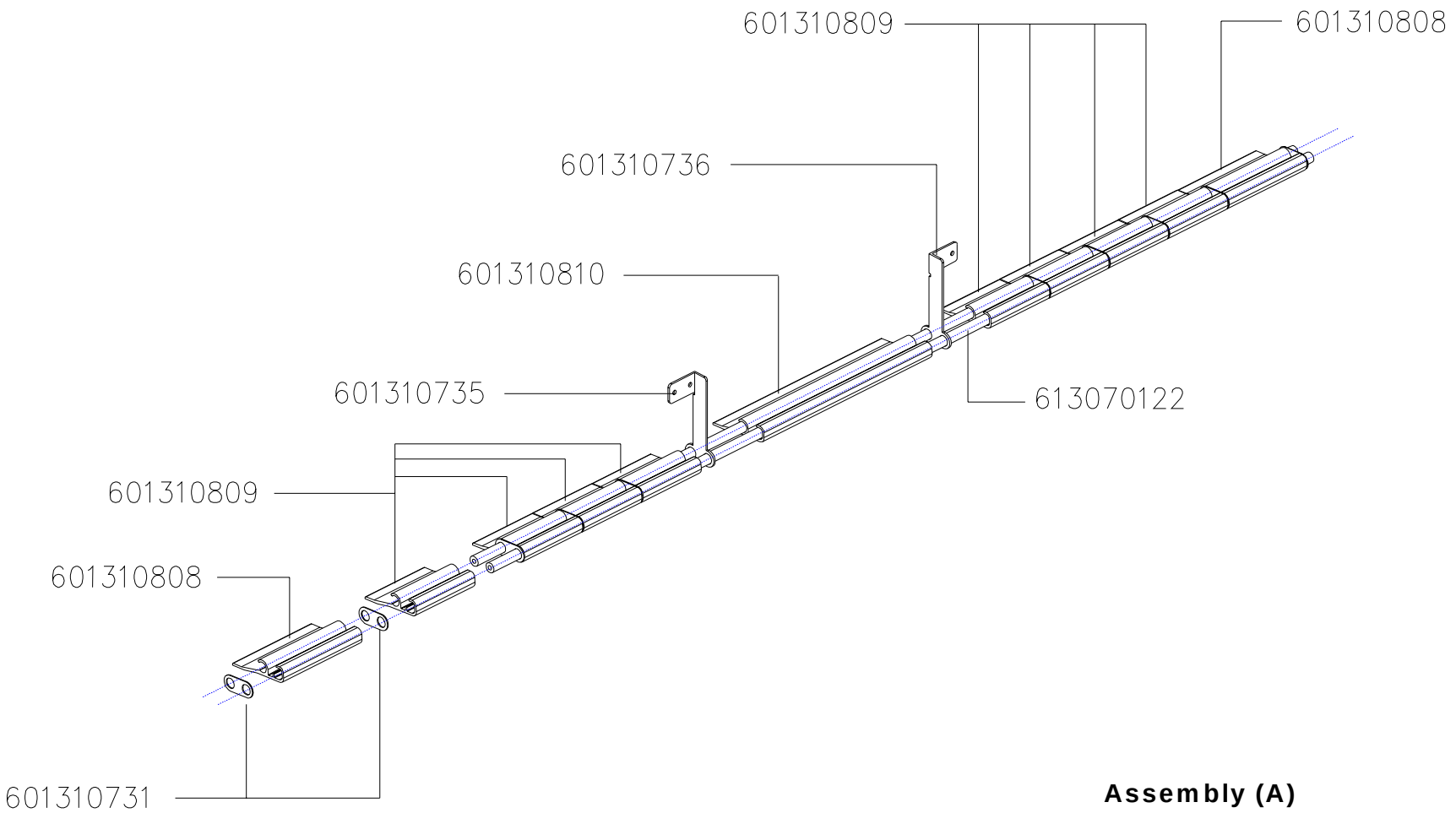

Assembly (A)

This print is the property of GBC Films Group. The information thereon is remitted in confidence.

UNLESS OTHERWISE SPECIFIED TOLERANCE		FINISH TO BE	GBC Films Group 4151 Anderson Road, DeForest, WI 53532			
DIM. AS SHOWN	TOL.	125	TITLE : Digital Cutter: Hold finger assembly			
XIX	±.164					
X	±.050					
XX	±.010					
XXX	±.020	ANGLES ±1D	DATE : 07/13/00	DRAWN BY : N/A	DWG SCALE : N/A	DWG : DC - 008
XXXX	±.005					

ORIGINATOR: GMP

CHECKED BY : GBC FILMS GROUP

REVISION

© GBC Films Group July 2000

PROPRIETARY

GBC PRO-TECH CLAIMS PROPRIETARY RIGHTS TO THE MATERIAL DISCLOSED ON THIS DRAWING. IT IS ISSUED IN CONFIDENCE FOR ENGINEERING INFORMATION ONLY AND SHALL NOT BE REPRODUCED, COPIED OR DISCLOSED IN WHOLE OR IN PART, OR USED FOR MANUFACTURE OR FOR ANY OTHER PURPOSE WITHOUT WRITTEN PERMISSION FROM GBC PRO-TECH

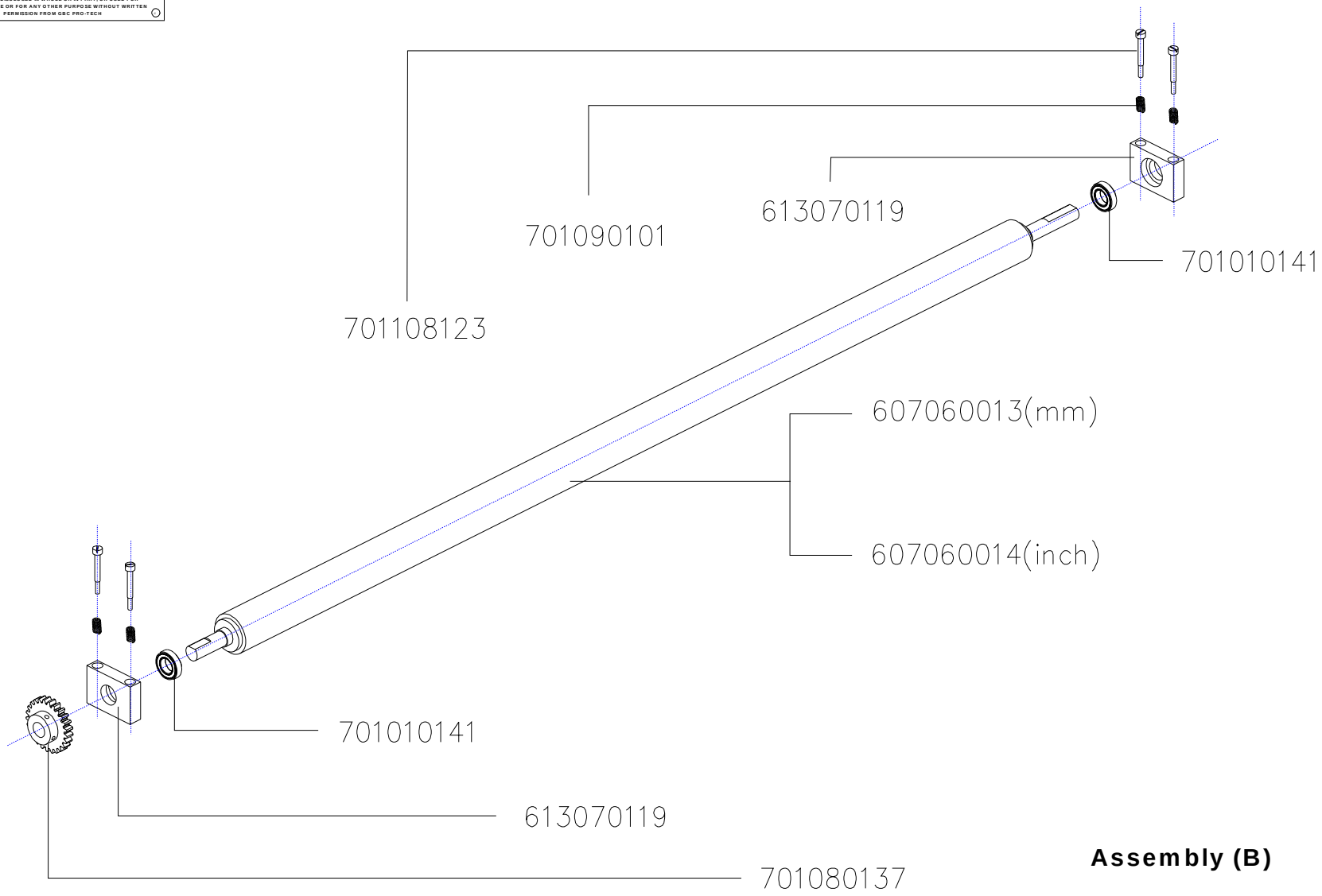

Assembly (B)

ORIGINATOR : GMP
CHECKED BY : GBC FILMS GROUP
REVISION

This print is the property of GBC Films Group. The information thereon is remitted in confidence.

UNLESS OTHERWISE SPECIFIED TOLERANCE

DIM. AS SHOWN	TOL.
X/X	±.1/64
X	±.050
XX	±.010
XXX	±.020
XXXX	±.005

FINISH TO BE 125 √

ANGLES ±1/2

GBC Films Group
4151 Anderson Road, DeForest, WI 53532

TITLE : Digital Cutter: Upper feed roller

DATE :	DRAWN BY :	DWG SCALE :	DWG :
07/13/00	N/A	N/A	DC - 009

© GBC Films Group July 2000

PROPRIETARY

GBC PRO-TECH CLAIMS PROPRIETARY RIGHTS TO THE MATERIAL DISCLOSED ON THIS DRAWING. IT IS ISSUED IN CONFIDENCE FOR ENGINEERING INFORMATION ONLY AND SHALL NOT BE REPRODUCED, COPIED OR DISCLOSED IN WHOLE OR IN PART, OR USED FOR MANUFACTURE OR FOR ANY OTHER PURPOSE WITHOUT WRITTEN PERMISSION FROM GBC PRO-TECH

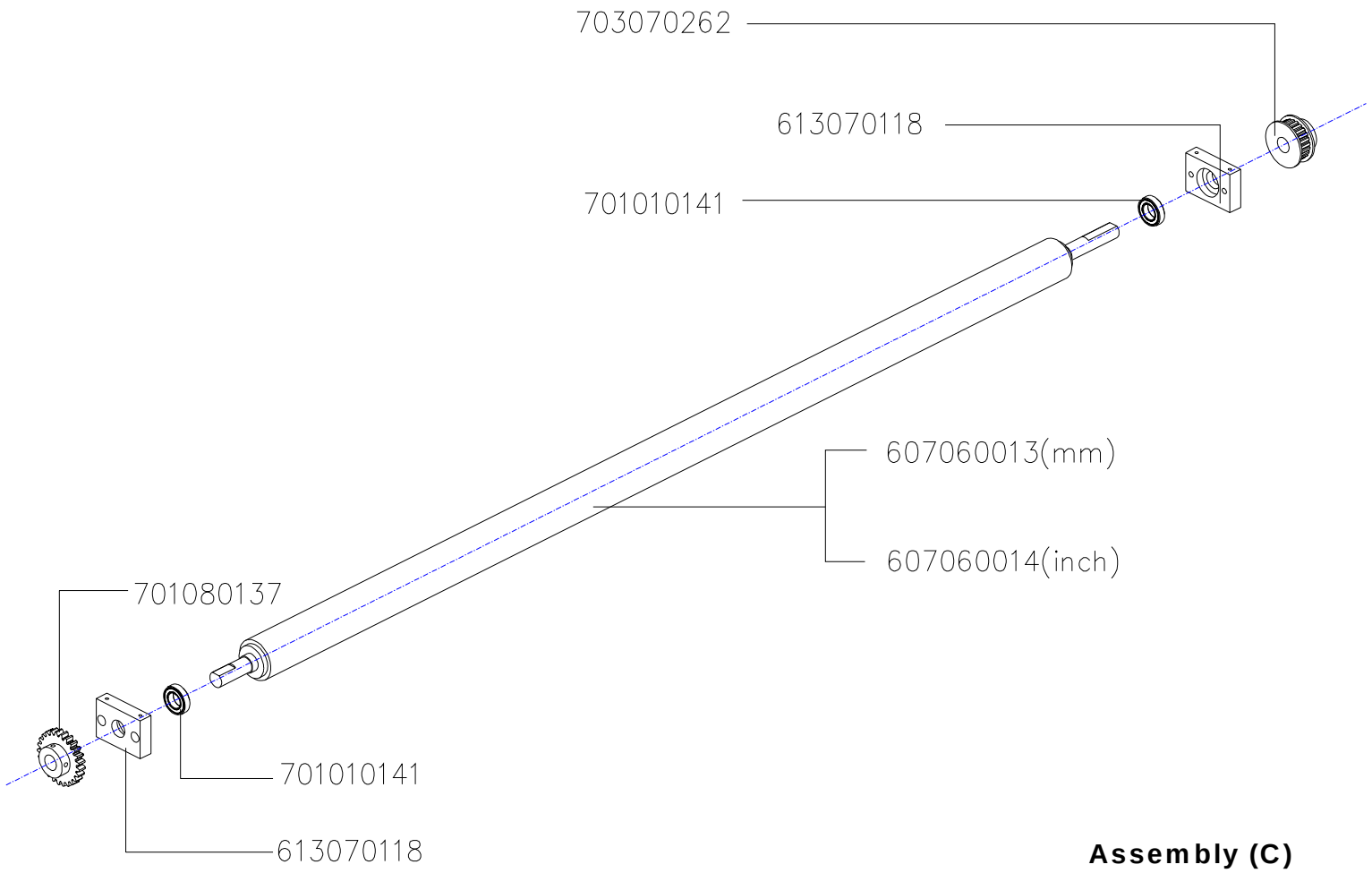

Assembly (C)

This print is the property of GBC Films Group. The information thereon is remitted in confidence.

UNLESS OTHERWISE SPECIFIED TOLERANCE		FINISH TO BE	GBC Films Group 4151 Anderson Road, DeForest, WI 53532			
DIM. AS SHOWN	TOL.	125 √	TITLE : Digital Cutter: Lower feed roller			
X/X	±.1/64					
X	±.050					
XX	±.010					
XXX	±.020	ANGLES ±1D	DATE :	DRAWN BY :	DWG SCALE :	DWG :
XXXX	±.005		07/13/00	N/A	N/A	DC - 010

ORIGINATOR: CAMP
CHECKED BY: GBC FILMS GROUP
REVISION

© GBC Films Group July 2000

PROPRIETARY

GBC PRO-TECH CLAIMS PROPRIETARY RIGHTS TO THE MATERIAL DISCLOSED ON THIS DRAWING. IT IS ISSUED IN CONFIDENCE FOR ENGINEERING INFORMATION ONLY AND SHALL NOT BE REPRODUCED, COPIED OR DISCLOSED IN WHOLE OR IN PART, OR USED FOR MANUFACTURE OR FOR ANY OTHER PURPOSE WITHOUT WRITTEN PERMISSION FROM GBC PRO-TECH

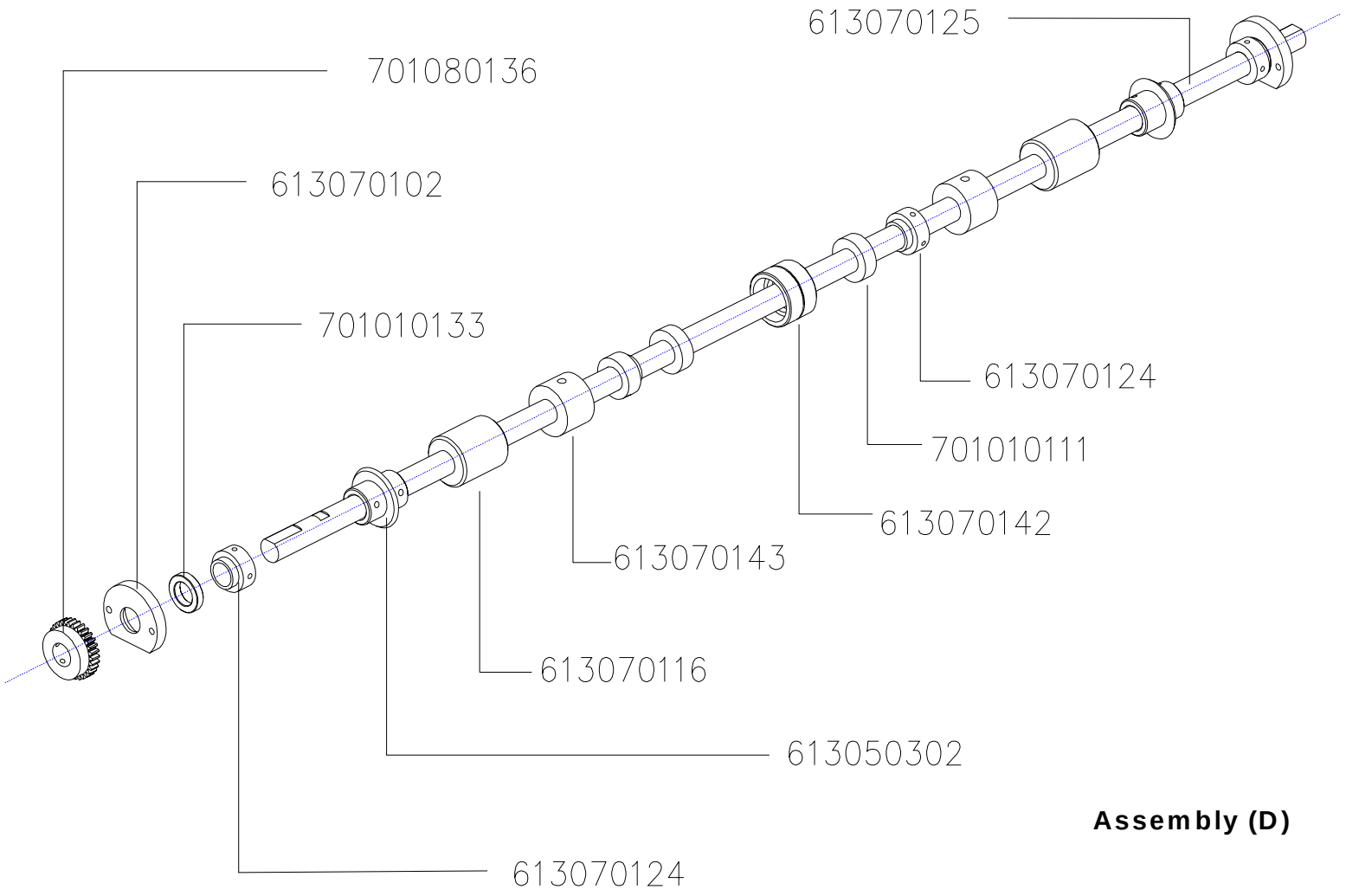

Assembly (D)

ORIGINATOR : GMP

CHECKED BY : GBC FILMS GROUP

REVISION

This print is the property of GBC Films Group. The information thereon is remitted in confidence.

UNLESS OTHERWISE SPECIFIED TOLERANCE

DIM. AS SHOWN	TOL.
X/X	±.1/64
X	±.050
XX	±.010
XXX	±.020
XXXX	±.005

FINISH TO BE 125 √

ANGLES ±.10

GBC Films Group
4151 Anderson Road, DeForest, WI 53532

TITLE : Digital Cutter: Upper feed slitter idler

DATE :	DRAWN BY :	DWG SCALE :	DWG :
07/13/00	N/A	N/A	DC - 011

© GBC Films Group July 2000

PROPRIETARY

GBC PRO-TECH CLAIMS PROPRIETARY RIGHTS TO THE MATERIAL DISCLOSED ON THIS DRAWING. IT IS ISSUED IN CONFIDENCE FOR ENGINEERING INFORMATION ONLY AND SHALL NOT BE REPRODUCED, COPIED OR DISCLOSED IN WHOLE OR IN PART, OR USED FOR MANUFACTURE OR FOR ANY OTHER PURPOSE WITHOUT WRITTEN PERMISSION FROM GBC PRO-TECH

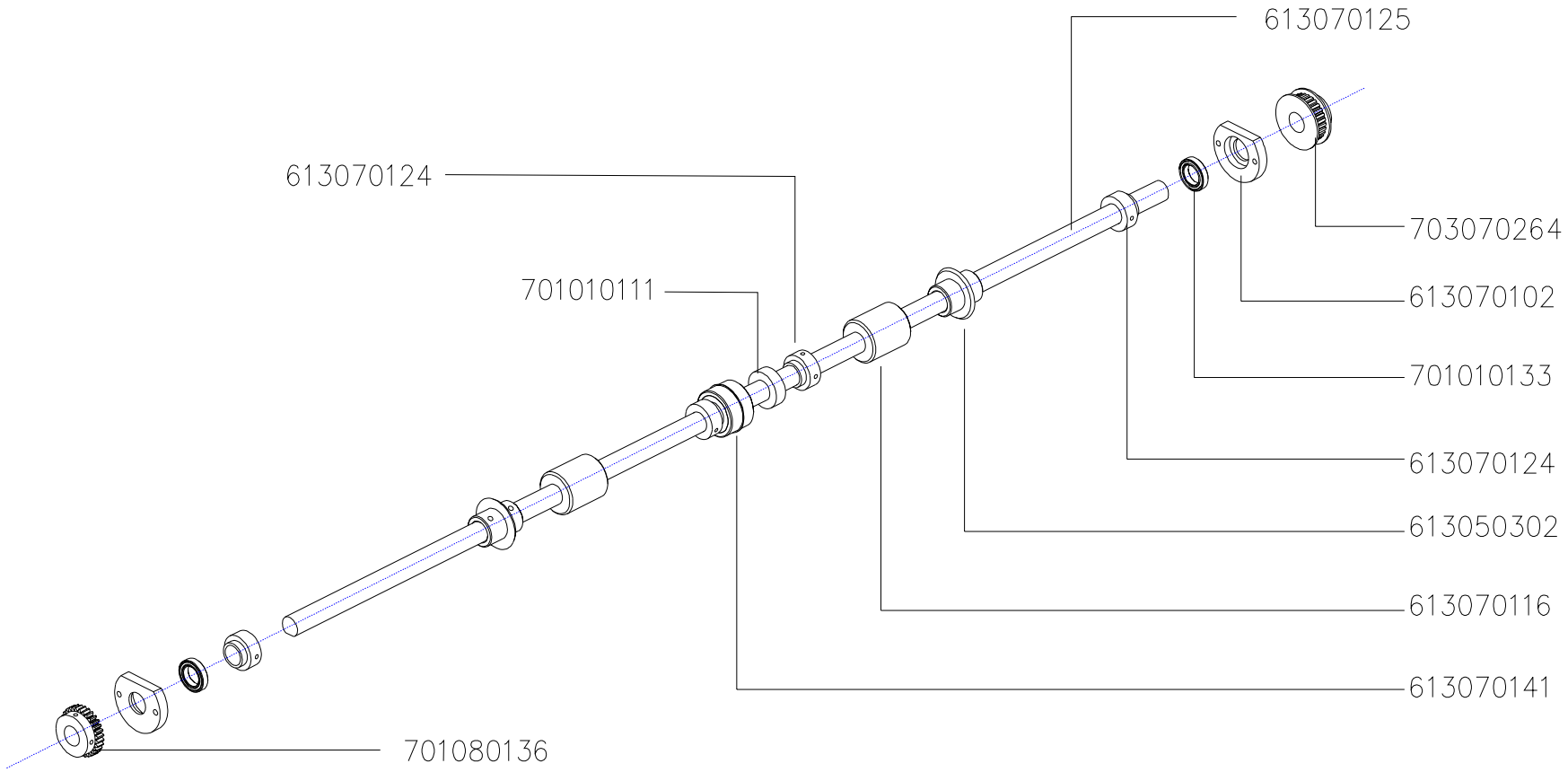

Assembly (E)

This print is the property of GBC Films Group. The information thereon is remitted in confidence.

UNLESS OTHERWISE SPECIFIED TOLERANCE		FINISH TO BE
DIM. AS SHOWN	TOL.	
X/X	±.1/64	125 √
X	±.050	
XX	±.010	
XXX	±.020	ANGLES ±1D
XXXX	±.005	

ORIGINATOR: CAMP
CHECKED BY: GBC FILMS GROUP
REVISION

GBC Films Group
4151 Anderson Road, DeForest, WI 53532

TITLE :
Digital Cutter: Lower feed slitter idler

DATE :	DRAWN BY :	DWG SCALE :	DWG :
07/13/00	N/A	N/A	DC - 012

© GBC Films Group July 2000

PROPRIETARY

GBC PRO-TECH CLAIMS PROPRIETARY RIGHTS TO THE MATERIAL DISCLOSED ON THIS DRAWING. IT IS ISSUED IN CONFIDENCE FOR ENGINEERING INFORMATION ONLY AND SHALL NOT BE REPRODUCED, COPIED OR DISCLOSED IN WHOLE OR IN PART, OR USED FOR MANUFACTURE OR FOR ANY OTHER PURPOSE WITHOUT WRITTEN PERMISSION FROM GBC PRO-TECH

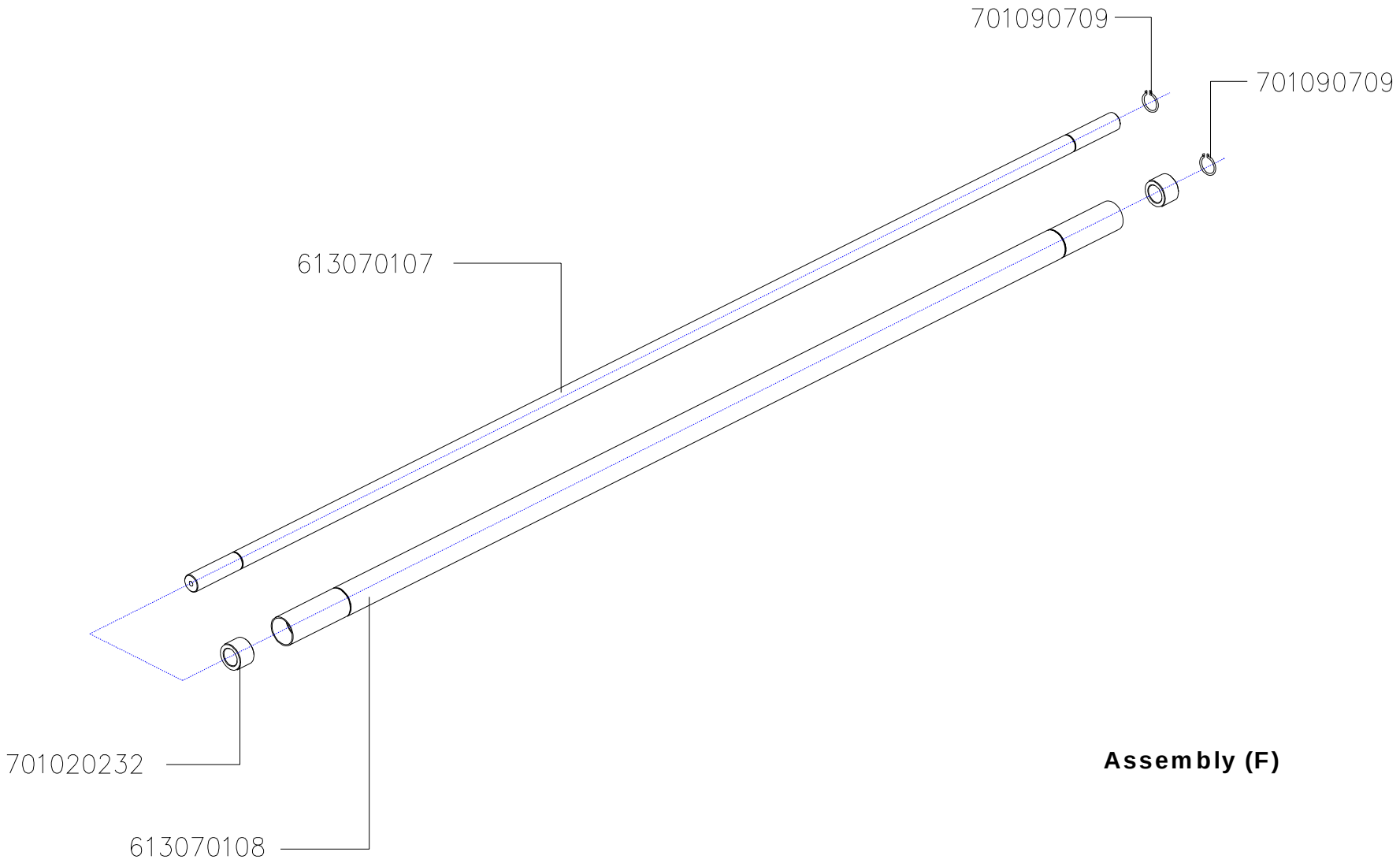

Assembly (F)

ORIGINATOR : GMP

CHECKED BY : GBC FILMS GROUP

REVISION

This print is the property of GBC Films Group. The information thereon is remitted in confidence.

UNLESS OTHERWISE SPECIFIED TOLERANCE		FINISH TO BE
DIM. AS SHOWN	TOL.	
X/X	± 1/64	
X	± .050	
XX	± .010	
XXX	± .020	
XXXX	± .005	ANGLES ± 1/2°

GBC Films Group
4151 Anderson Road, DeForest, WI 53532

TITLE : Digital Cutter: Feed web idler

DATE :	DRAWN BY :	DWG SCALE :	DWG :
07/13/00	N/A	N/A	DC - 013

© GBC Films Group July 2000

PROPRIETARY

GBC PRO-TECH CLAIMS PROPRIETARY RIGHTS TO THE MATERIAL DISCLOSED ON THIS DRAWING. IT IS ISSUED IN CONFIDENCE FOR ENGINEERING INFORMATION ONLY AND SHALL NOT BE REPRODUCED, COPIED OR DISCLOSED IN WHOLE OR IN PART, OR USED FOR MANUFACTURE OR FOR ANY OTHER PURPOSE WITHOUT WRITTEN PERMISSION FROM GBC PRO-TECH

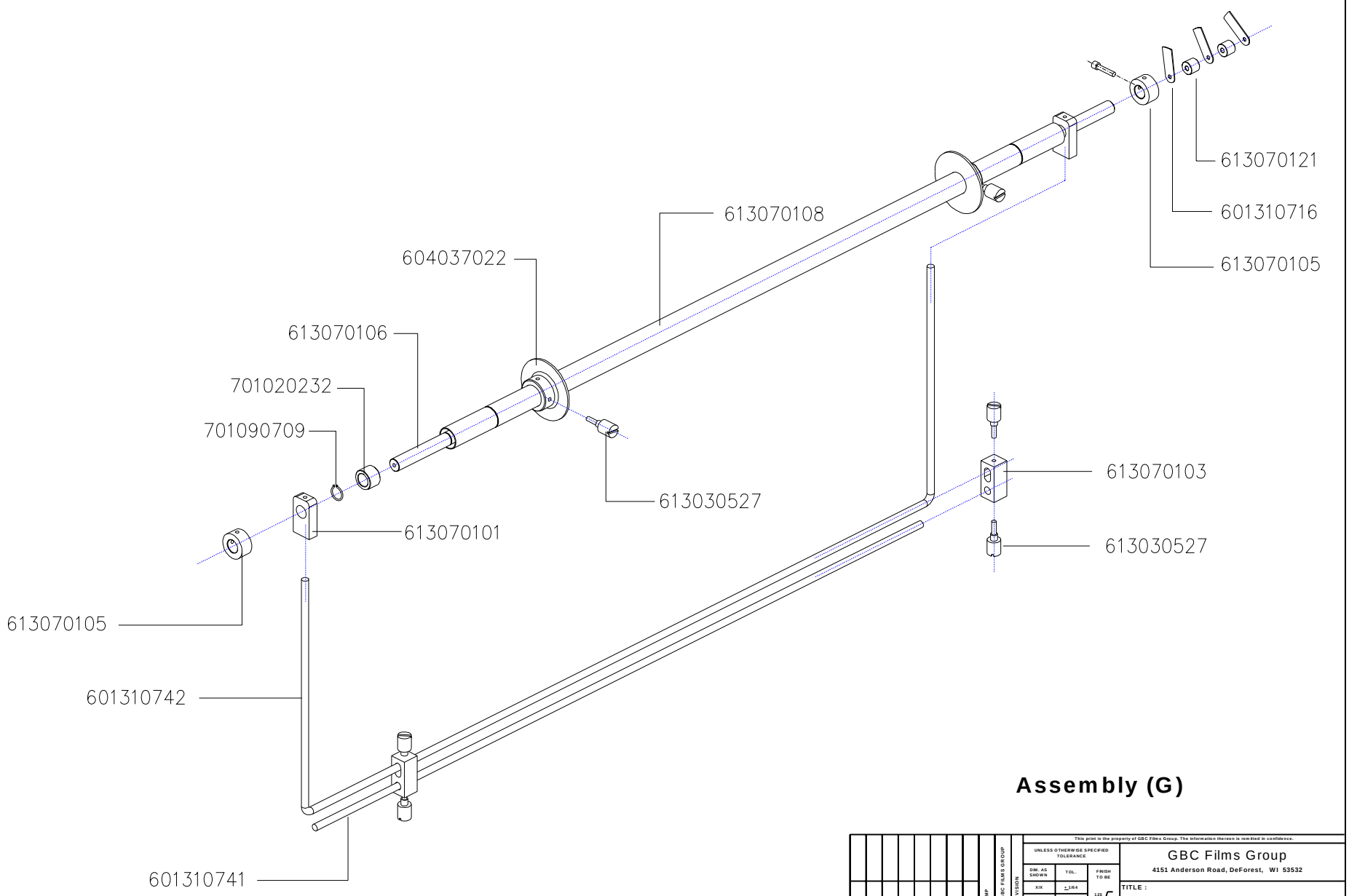

Assembly (G)

This print is the property of GBC Films Group. The information thereon is remitted in confidence.

ORIGINATOR: GMP
CHECKED BY : GBC FILMS GROUP
REVISION

UNLESS OTHERWISE SPECIFIED TOLERANCE

DIM. AS SHOWN	TOL.
XIX	±.164
X	±.050
XX	±.010
XXX	±.020
XXXX	±.005

FINISH TO BE 125 √

ANGLES ±1D

GBC Films Group
4151 Anderson Road, DeForest, WI 53532

TITLE : Digital Cutter: Shortage bar assembly

DATE :	DRAWN BY :	DWG SCALE :	DWG :
07/13/00	N/A	N/A	DC - 014

© GBC Films Group July 2000

PROPRIETARY

GBC PRO-TECH CLAIMS PROPRIETARY RIGHTS TO THE MATERIAL DISCLOSED ON THIS DRAWING. IT IS ISSUED IN CONFIDENCE FOR ENGINEERING INFORMATION ONLY AND SHALL NOT BE REPRODUCED, COPIED OR DISCLOSED IN WHOLE OR IN PART, OR USED FOR MANUFACTURE OR FOR ANY OTHER PURPOSE WITHOUT WRITTEN PERMISSION FROM GBC PRO-TECH

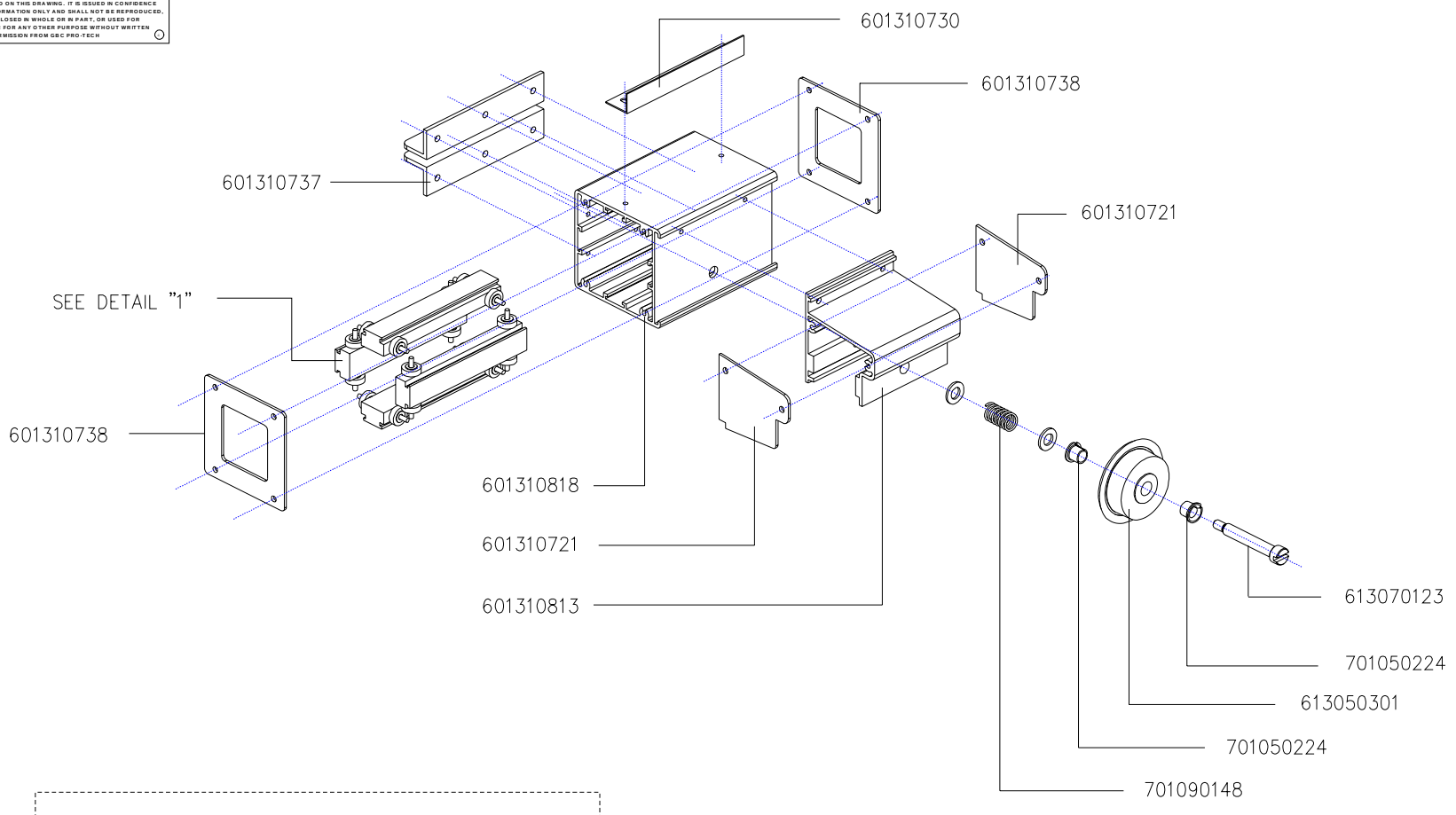

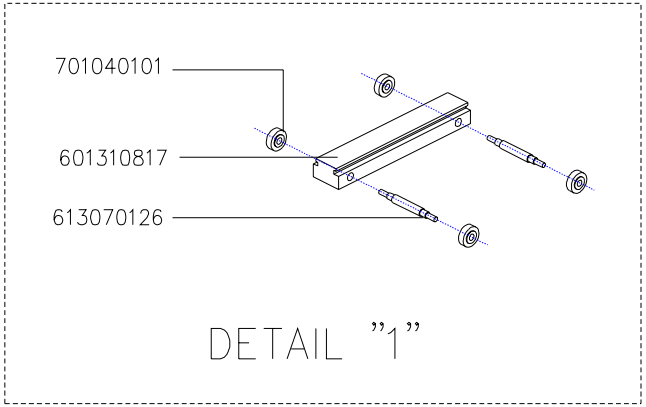

Assembly (H)

This print is the property of GBC Films Group. The information thereon is remitted in confidence.

UNLESS OTHERWISE SPECIFIED TOLERANCE		FINISH TO BE
DIM. AS SHOWN	TOL.	
X/X	±.1/64	
X	±.050	
XX	±.010	
XXX	±.020	
XXXX	±.005	
ANGLES	±.10	

ORIGINATOR - GMP
CHECKED BY - GBC FILMS GROUP
REVISION

GBC Films Group
4151 Anderson Road, DeForest, WI 53532

TITLE :
Digital Cutter: Rotary cutting head unit

DATE :	DRAWN BY :	DWG SCALE :	DWG :
07/13/00	N/A	N/A	DC - 015

© GBC Films Group July 2000

PROPRIETARY

GBC PRO-TECH CLAIMS PROPRIETARY RIGHTS TO THE MATERIAL DISCLOSED ON THIS DRAWING. IT IS ISSUED IN CONFIDENCE FOR ENGINEERING INFORMATION ONLY AND SHALL NOT BE REPRODUCED, COPIED OR DISCLOSED IN WHOLE OR IN PART, OR USED FOR MANUFACTURE OR FOR ANY OTHER PURPOSE WITHOUT WRITTEN PERMISSION FROM GBC PRO-TECH

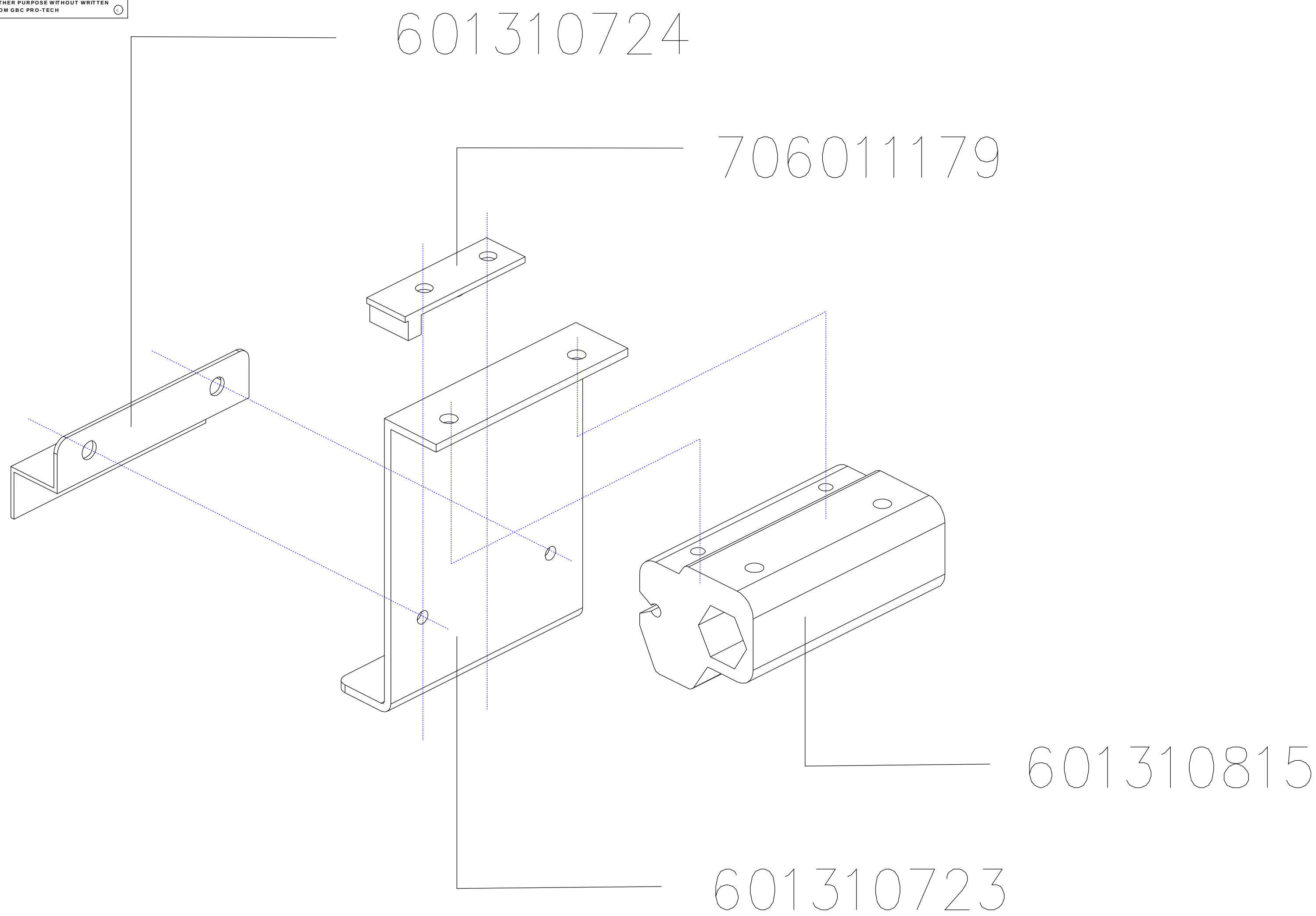

Assembly (I)

This print is the property of GBC Films Group. The information thereon is remitted in confidence.

ORIGINATOR : GMP
CHECKED BY : GBC FILMS GROUP
REVISION

UNLESS OTHERWISE SPECIFIED TOLERANCE		
DIM. AS SHOWN	TOL.	FINISH TO BE
X/X	± 1/64	125 √
X	± .050	
XX	± .010	
XXX	± .020	ANGLES ± 1D
XXXX	± .005	

GBC Films Group
4151 Anderson Road, DeForest, WI 53532

TITLE : Digital Cutter: Optical sensor assembly

DATE :	DRAWN BY :	DWG SCALE :	DWG :
07/13/00	N/A	N/A	DC - 016

© GBC Films Group July 2000

PROPRIETARY

GBC PRO-TECH CLAIMS PROPRIETARY RIGHTS TO THE MATERIAL DISCLOSED ON THIS DRAWING. IT IS ISSUED IN CONFIDENCE FOR ENGINEERING INFORMATION ONLY AND SHALL NOT BE REPRODUCED, COPIED OR DISCLOSED IN WHOLE OR IN PART, OR USED FOR MANUFACTURE OR FOR ANY OTHER PURPOSE WITHOUT WRITTEN PERMISSION FROM GBC PRO-TECH

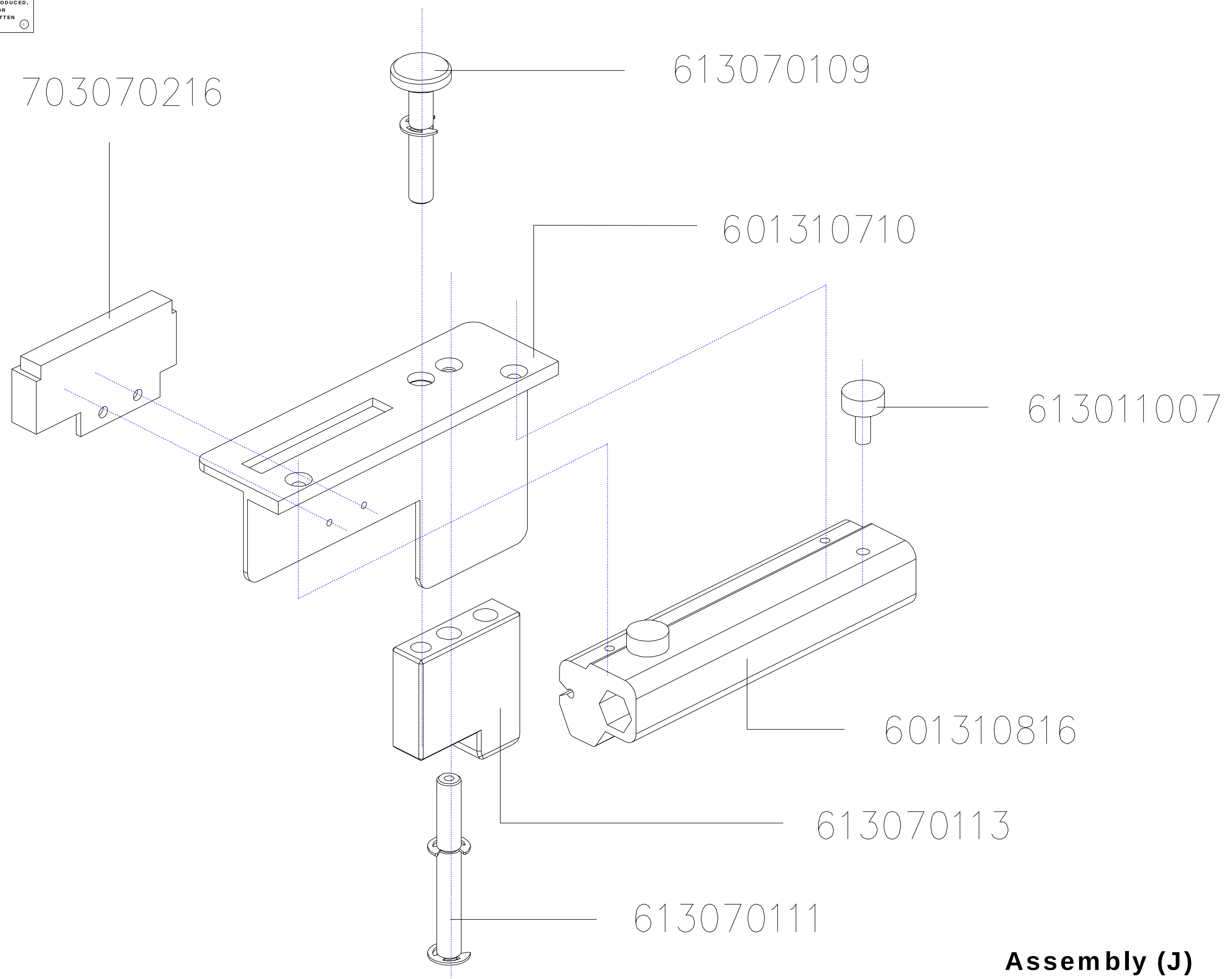

Assembly (J)

This print is the property of GBC Films Group. The information thereon is remitted in confidence.

ORIGINATOR : GMP
CHECKED BY : GBC FILMS GROUP
REVISION

UNLESS OTHERWISE SPECIFIED TOLERANCE

DIM. AS SHOWN	TOL.	FINISH TO BE
X/X	± 1/64	125 √
X	± .050	
XX	± .010	
XXX	± .020	ANGLES ± 1D
XXXX	± .005	

GBC Films Group
4151 Anderson Road, DeForest, WI 53532

TITLE :
Digital Cutter: Crop mark reader sensor

DATE :	DRAWN BY :	DWG SCALE :	DWG :
07/13/00	N/A	N/A	DC - 017

© GBC Films Group July 2000

PROPRIETARY

GBC PRO-TECH CLAIMS PROPRIETARY RIGHTS TO THE MATERIAL DISCLOSED ON THIS DRAWING. IT IS ISSUED IN CONFIDENCE FOR ENGINEERING INFORMATION ONLY AND SHALL NOT BE REPRODUCED, COPIED OR DISCLOSED IN WHOLE OR IN PART, OR USED FOR MANUFACTURE OR FOR ANY OTHER PURPOSE WITHOUT WRITTEN PERMISSION FROM GBC PRO-TECH

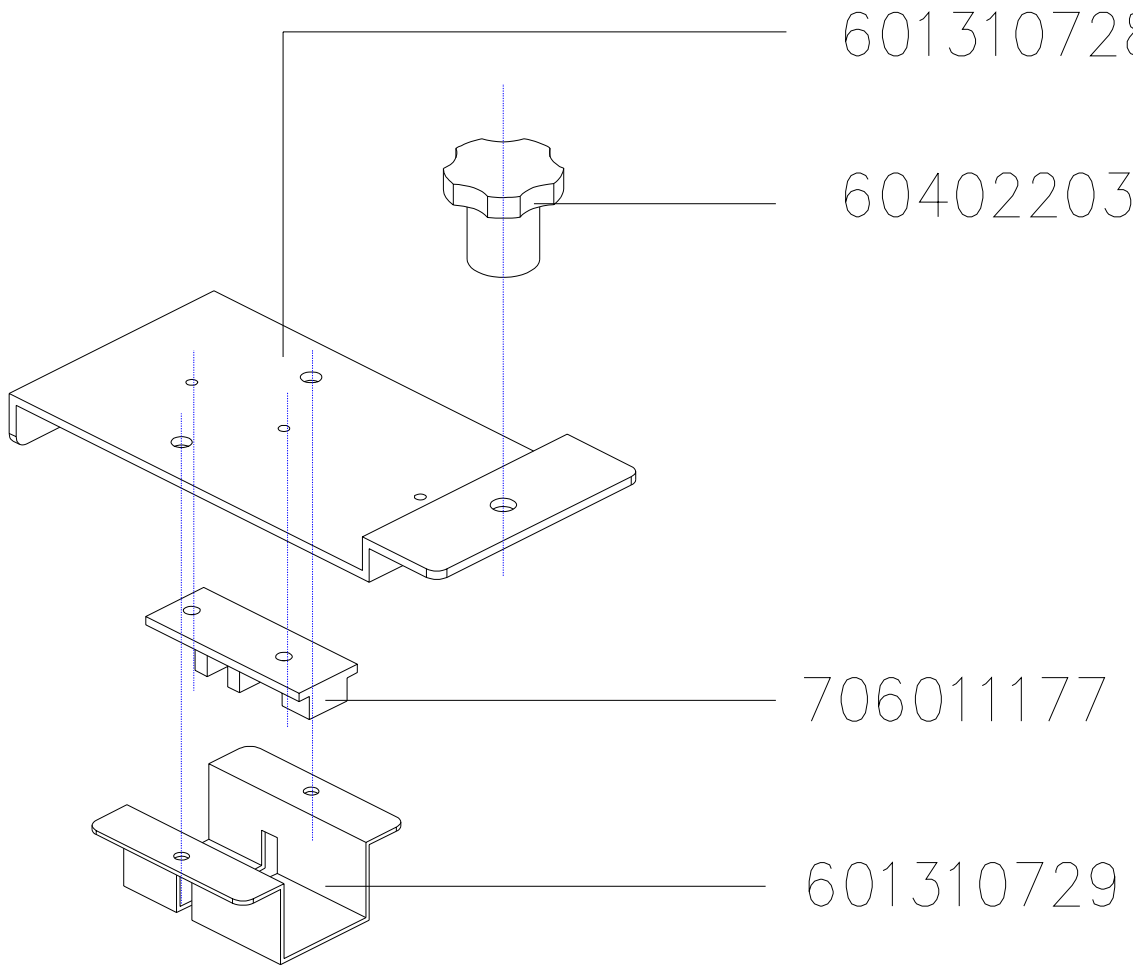

Assembly (K)

This print is the property of GBC Films Group. The information thereon is remitted in confidence.

UNLESS OTHERWISE SPECIFIED TOLERANCE		FINISH TO BE
DIM. AS SHOWN	TOL.	125 √
X/X	±.1/64	
X	±.050	
XX	±.010	
XXX	±.020	
XXXX	±.005	ANGLES ±1D

ORIGINATOR: CAMP
CHECKED BY: GBC FILMS GROUP
REVISION

GBC Films Group
4151 Anderson Road, DeForest, WI 53532

TITLE : Digital Cutter: Cutting head sensor

DATE :	DRAWN BY :	DWG SCALE :	DWG :
07/13/00	N/A	N/A	DC - 018

© GBC Films Group July 2000

PROPRIETARY

GBC PRO-TECH CLAIMS PROPRIETARY RIGHTS TO THE MATERIAL DISCLOSED ON THIS DRAWING. IT IS ISSUED IN CONFIDENCE FOR ENGINEERING INFORMATION ONLY AND SHALL NOT BE REPRODUCED, COPIED OR DISCLOSED IN WHOLE OR IN PART, OR USED FOR MANUFACTURE OR FOR ANY OTHER PURPOSE WITHOUT WRITTEN PERMISSION FROM GBC PRO-TECH

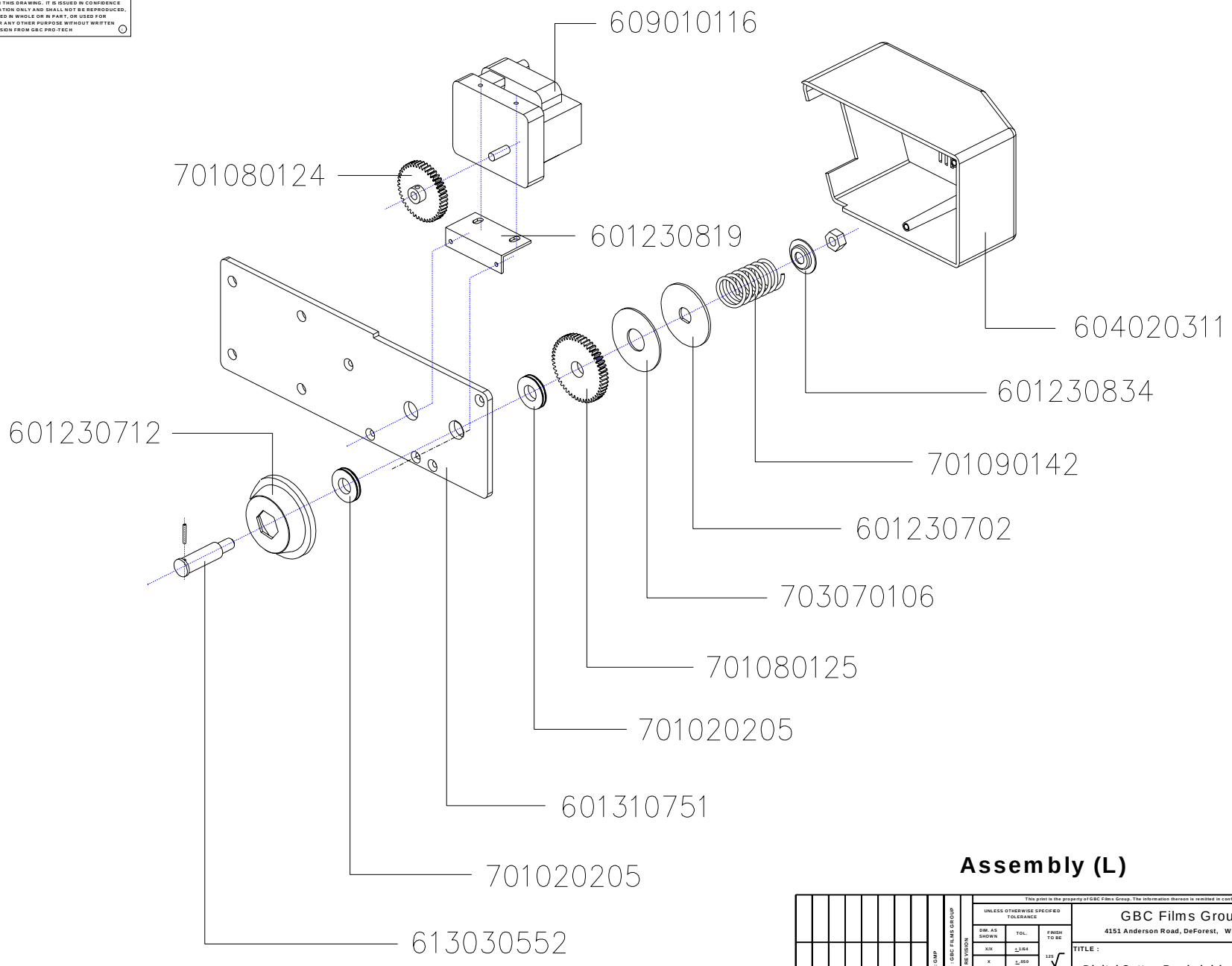

Assembly (L)

This print is the property of GBC Films Group. The information thereon is remitted in confidence.

UNLESS OTHERWISE SPECIFIED TOLERANCE

DIM. AS SHOWN	TOL.
X/X	±.1/64
X	±.050
XX	±.010
XXX	±.020
XXXX	±.005

FINISH TO BE 125 √

ANGLES ±.10

ORIGINATOR : GMP

CHECKED BY : GBC FILMS GROUP

REVISION

GBC Films Group
4151 Anderson Road, DeForest, WI 53532

TITLE : Digital Cutter: Rewind drive assembly

DATE :	DRAWN BY :	DWG SCALE :	DWG :
07/13/00	N/A	N/A	DC - 019

© GBC Films Group July 2000

PROPRIETARY

GBC PRO-TECH CLAIMS PROPRIETARY RIGHTS TO THE MATERIAL DISCLOSED ON THIS DRAWING. IT IS ISSUED IN CONFIDENCE FOR ENGINEERING INFORMATION ONLY AND SHALL NOT BE REPRODUCED, COPIED OR DISCLOSED IN WHOLE OR IN PART, OR USED FOR MANUFACTURE OR FOR ANY OTHER PURPOSE WITHOUT WRITTEN PERMISSION FROM GBC PRO-TECH

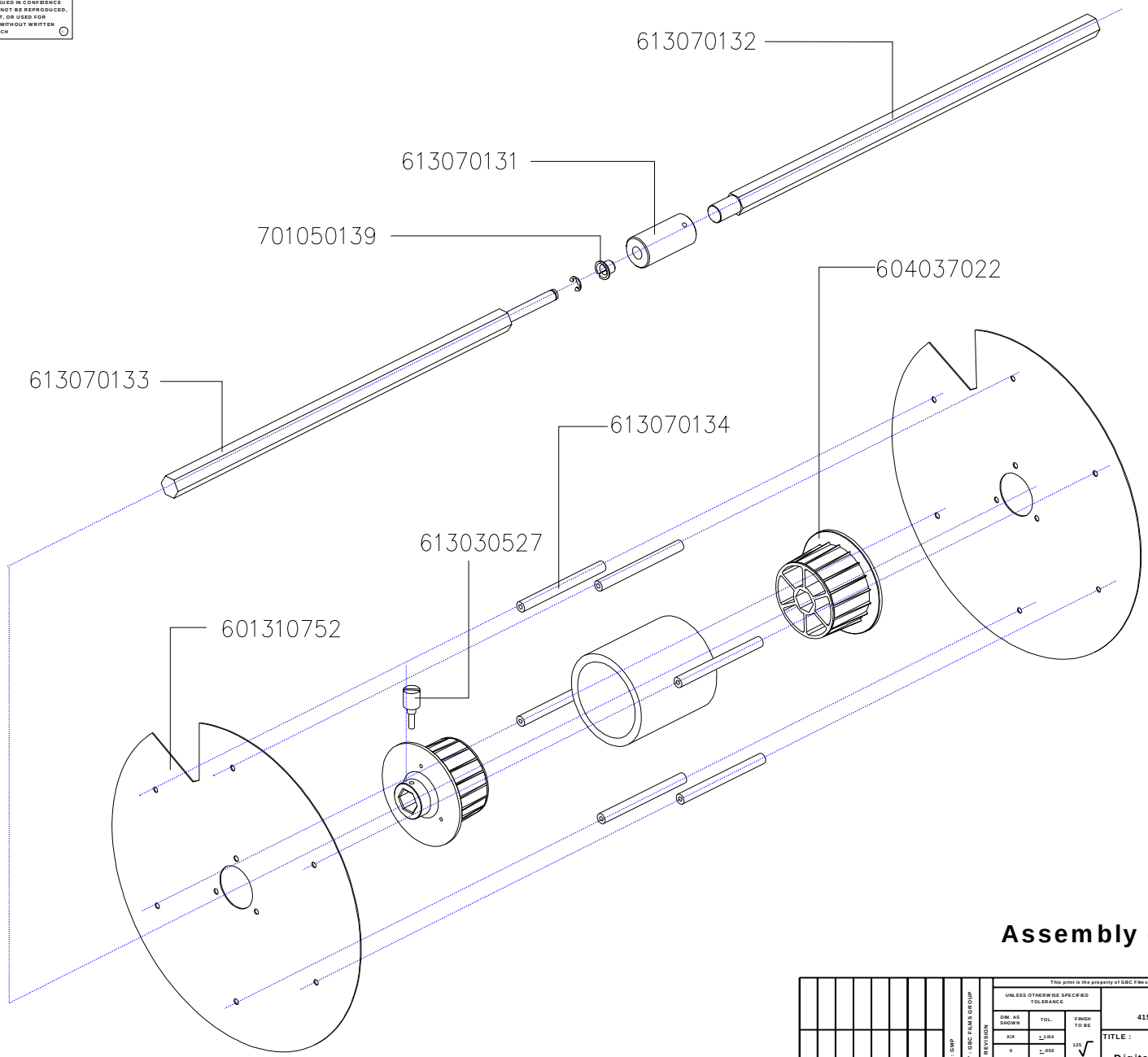

Assembly (M)

This print is the property of GBC Films Group. The information thereon is remitted in confidence.

UNLESS OTHERWISE SPECIFIED TOLERANCE

DIM. AS SHOWN	TOL.
X/X	±.1/64
X	±.050
XX	±.010
XXX	±.020
XXXX	±.005

FINISH TO BE 125 √

ANGLES ±1D

ORIGINATOR: CMP

CHECKED BY: GBC FILMS GROUP

REVISION

GBC Films Group
4151 Anderson Road, DeForest, WI 53532

TITLE :
Digital Cutter: Rewind shaft assembly

DATE :	DRAWN BY :	DWG SCALE :	DWG :
07/13/00	N/A	N/A	DC - 020

© GBC Films Group July 2000

PROPRIETARY

GBC PRO-TECH CLAIMS PROPRIETARY RIGHTS TO THE MATERIAL DISCLOSED ON THIS DRAWING. IT IS ISSUED IN CONFIDENCE FOR ENGINEERING INFORMATION ONLY AND SHALL NOT BE REPRODUCED, COPIED OR DISCLOSED IN WHOLE OR IN PART, OR USED FOR MANUFACTURE OR FOR ANY OTHER PURPOSE WITHOUT WRITTEN PERMISSION FROM GBC PRO-TECH

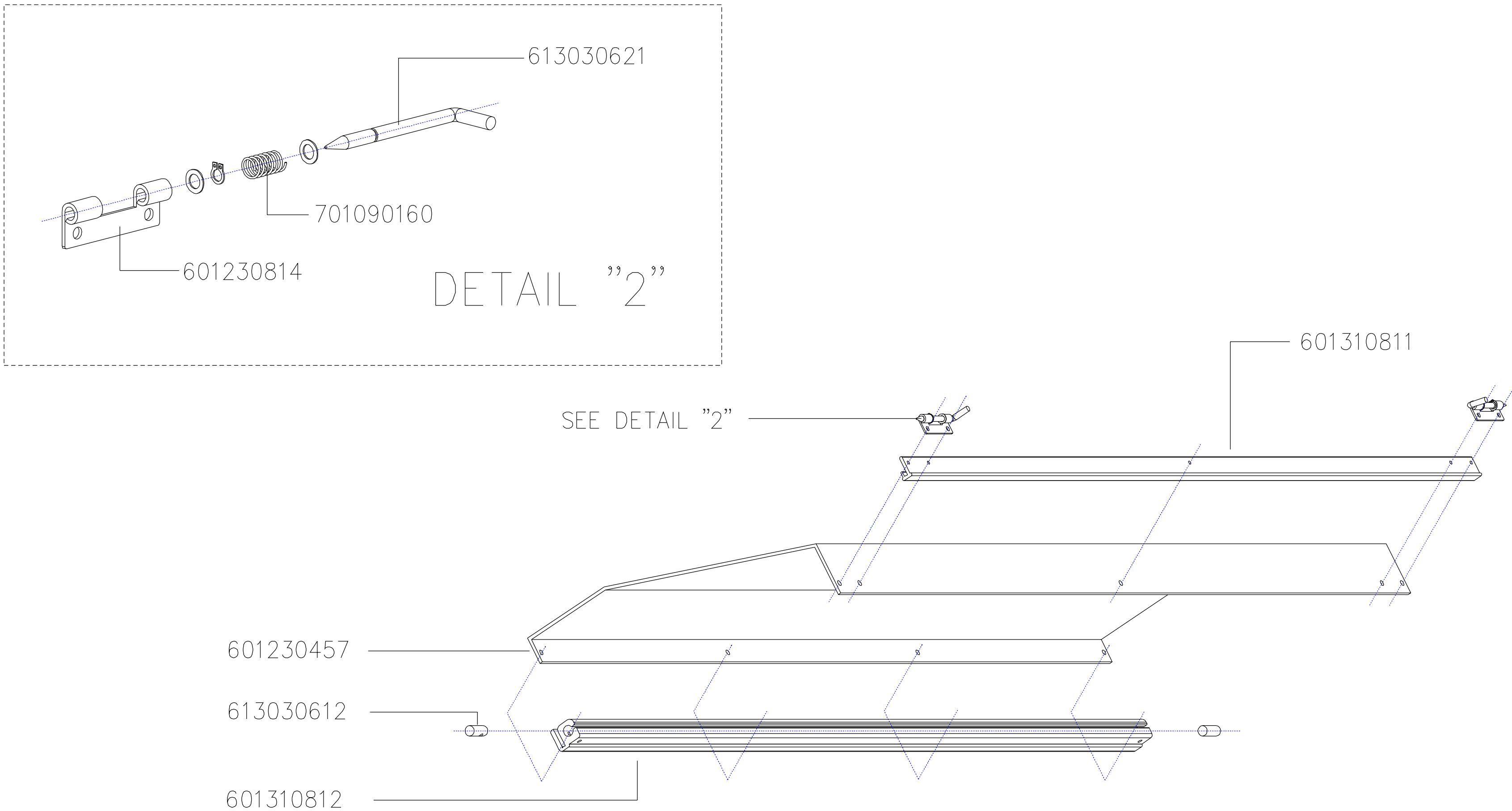

Assembly (N)

This print is the property of GBC Films Group. The information thereon is remitted in confidence.

ORIGINATOR : GMP
CHECKED BY : GBC FILMS GROUP
REVISION

UNLESS OTHERWISE SPECIFIED TOLERANCE		
DIM. AS SHOWN	TOL.	FINISH TO BE
X/X	± 1/64	125 √
X	± .050	
XX	± .010	
XXX	± .020	ANGLES ± 1D
XXXX	± .005	

GBC Films Group
4151 Anderson Road, DeForest, WI 53532

TITLE : Digital Cutter: Safety shield assembly

DATE :	DRAWN BY :	DWG SCALE :	DWG :
07/13/00	N/A	N/A	DC - 021

This page intentionally left blank.