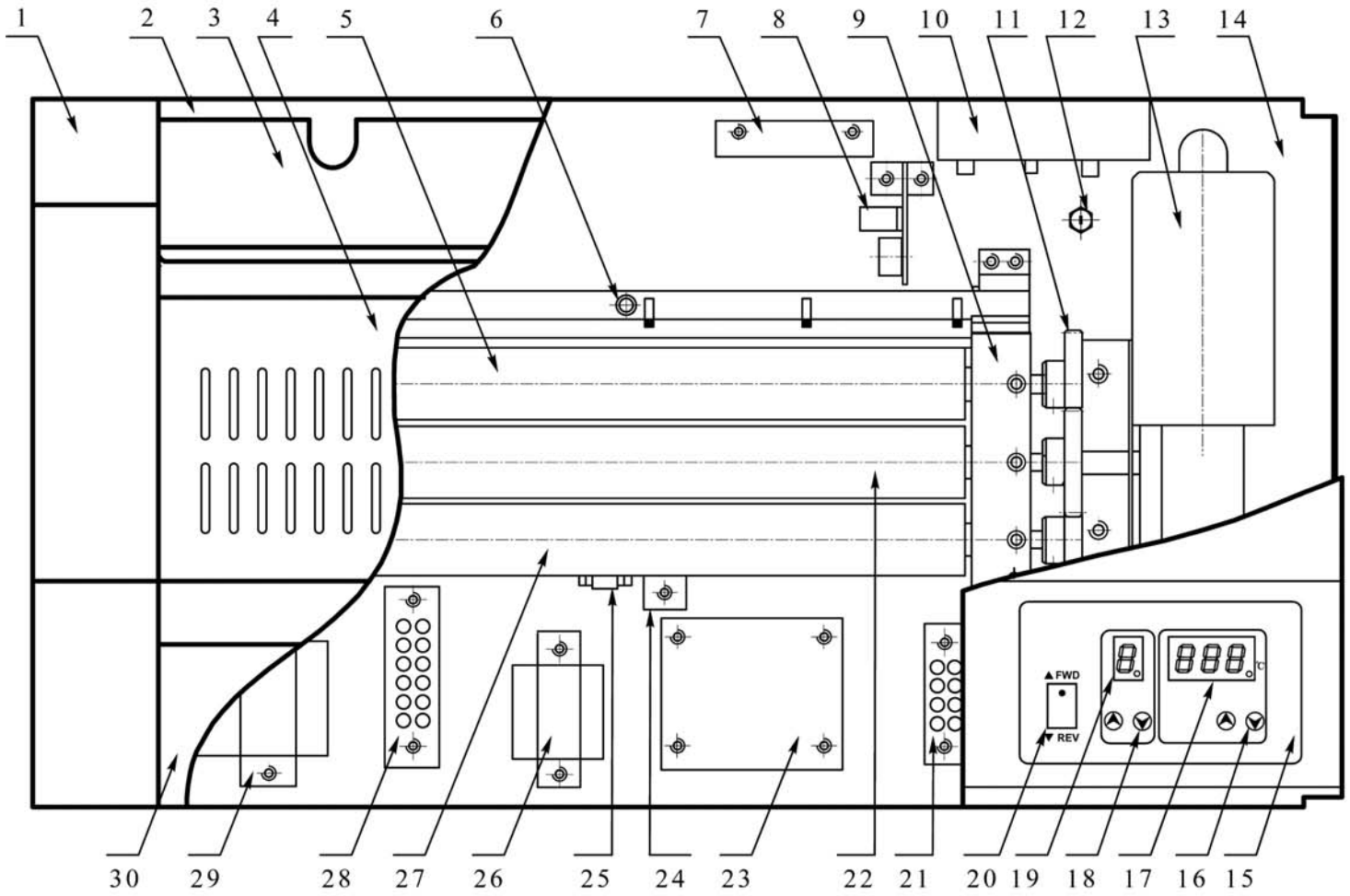

AKILES PROLAM-PHOTO LAMINATOR

Core Parts List

	Name Of Parts
1	Machine Case
2	Lower Output Plate
3	Upper Output Plate
4	Top Cover
5	Third Pressing Roller
6	Sleep Sensor
7	Cooling Fan
8	Filter PCB
9	Bakelite Support
10	Power Socket
11	Transmission Gear
12	Fuse
13	Motor
14	Base Plate
15	Control Panel
16	Temp. Button
17	Temp. Display
18	Speed Button
19	Speed Display
20	FWD/REV Switch
21	4 Hole Connector
22	Second Heating Roller
23	Rectify PCB
24	Over-hot relay
25	Temp. Sensor
26	Control Transformer
27	First Heating Roller
28	6 Hole Connector
29	Motor Transformer
30	Feeding Board