Skyline
Book Binding Machines & Supplies

COIL MAC 41
CORE PARTS LIST
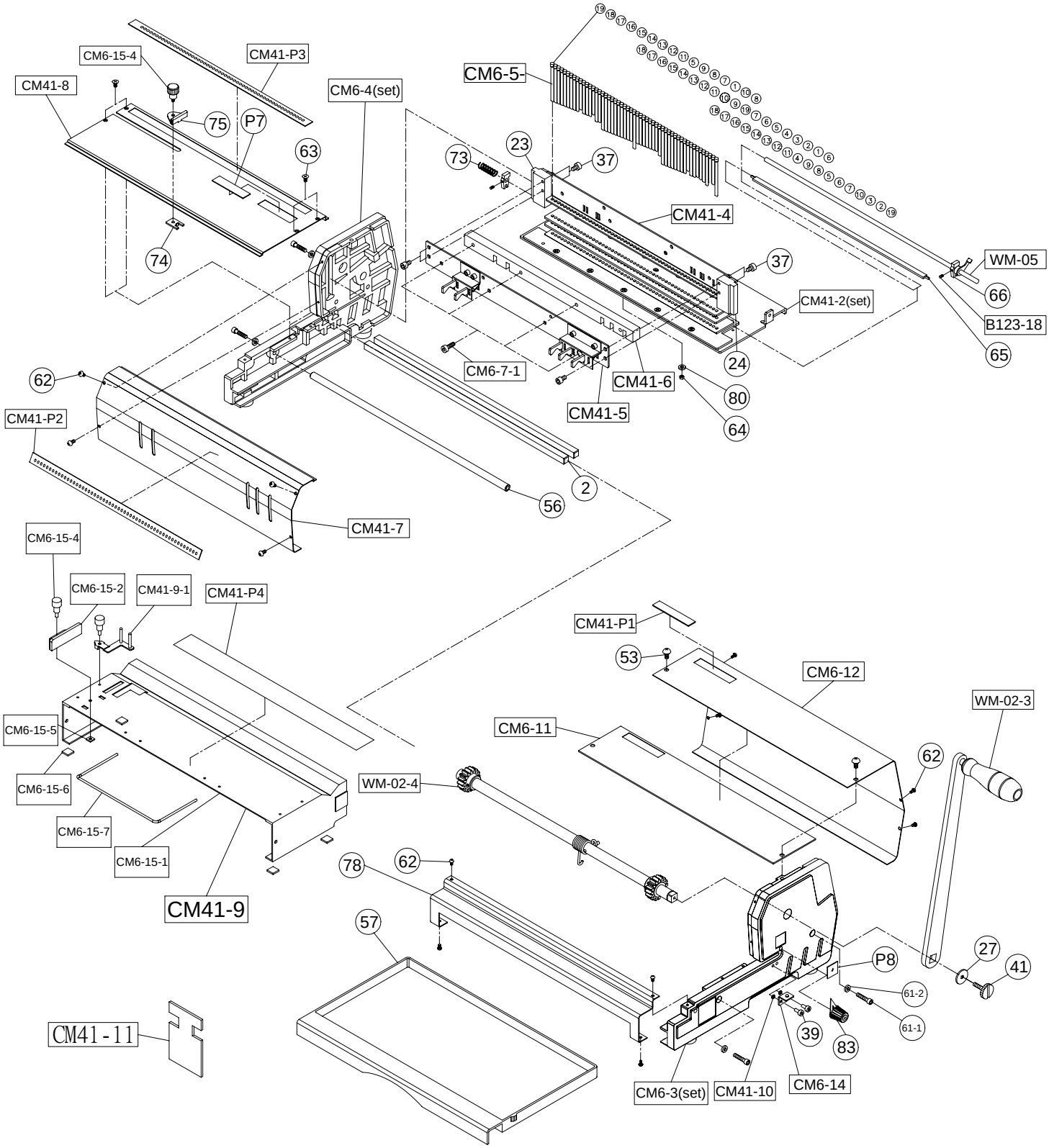
2003.5.5 PAGE1