Skyline

Book Binding Machines & Supplies

Sales • Service • Repair

Professional Service – Fast Nationwide Shipping

1-866-455-9900

www.OnlineSkyline.com CustomerService@onlineskyline.com

Valid from serial number: 14082354

Creasing and Perforating Machine

GoCrease F-SPEED

Warning

This document including the attachments is exclusive intellectual property of Cyklos Choltice (producer cooperative). Any other use (copying, distribution or sale) is possible only with approval of the chairman of the cooperative.

	Made by	Verified by	Approved by
Position	Designer	Senior Designer	Technical Director
Name	Marek Pelikán	I	Ing. Karel Komárek
Signature			
Date	11.1.2015		

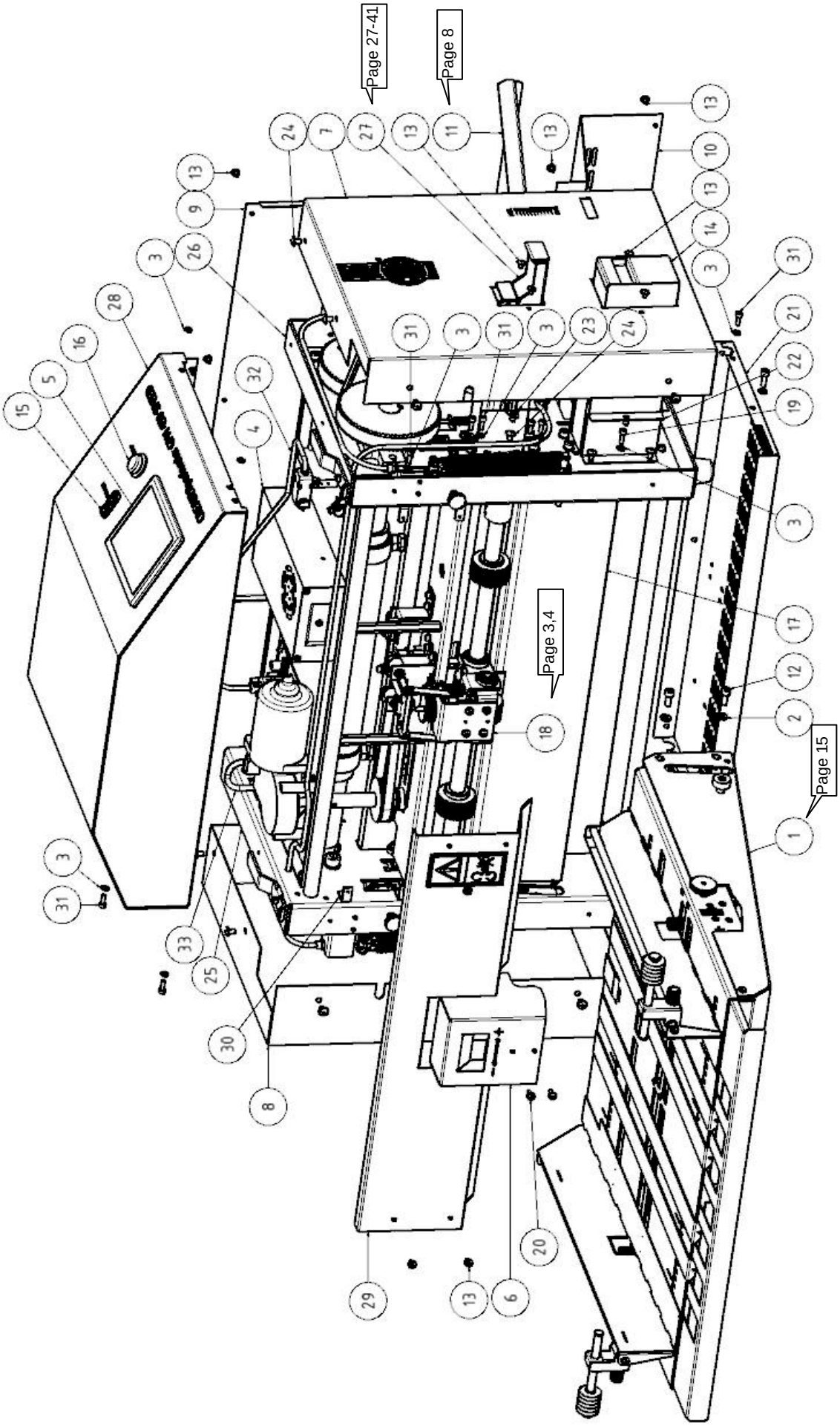
Page 27-41
Page 8
Page 3,4
Page 15

571 11 642 GoCrease F-SPEED				
Pos.	Pcs	Catalogue Number	Name	
1	1	571 49 684a	Feeding table assembled	
2	35	311 21 414/2	Washer 6,4x12x1,5	
3	82	311 21 412/2	Washer 4,3	
4	1	344 00 004/0	Power supply SP 200	
5	1	571 49 974	Display with programme	
6	1	571 75 154a	Feeder cover	
7	1	571 75 155	Left cover	
8	1	571 75 156	Right cover	
9	1	571 75 157	Upper back cover	
10	1	571 75 159	Lower back cover	
11	1	Page 18	Delivery table	
12	8	309 10 186/2	Screw M6x14 VS	
13	18	309 09 312/2	Screw M4x6 KP	
14	1	571 75 162	Drawer	
15	1	345 00 156/0	Switch P-C1300 AB	
16	1	345 30 216/0	Button STOP	
17	1	571 49 857	Sheet metal of paper separator	
18	1	Page 3,4	Assembling of mechanisms	
19	6	309 10 368/2	Screw M4x14 VS	
20	6	309 09 327/2	Screw M4x10 KP	
21	1	571 49 875	Bottom part assembled	
22	1	571 49 882	Passage of drawer assembled	
23	1	571 49 881	Passage of tool assembled	
24	16	309 17 260/2	Screw M5x8 KP	
25	1	571 49 887a	Right sideboard	
26	1	571 49 888a	Left sideboard	
27	1	Pages 27-41	Tool	
28	1	571 49 759	Upper cover assembled	
29	1	571 75 283a	Front cover	
30	4	571 46 432	Holder of front cover	
31	54	309 10 307/2	Screw M4x12 VS	
32	1	571 49 985	Date cable (Display –PC board)	
33	1	571 49 986	Date cable (Driver – PC board)	

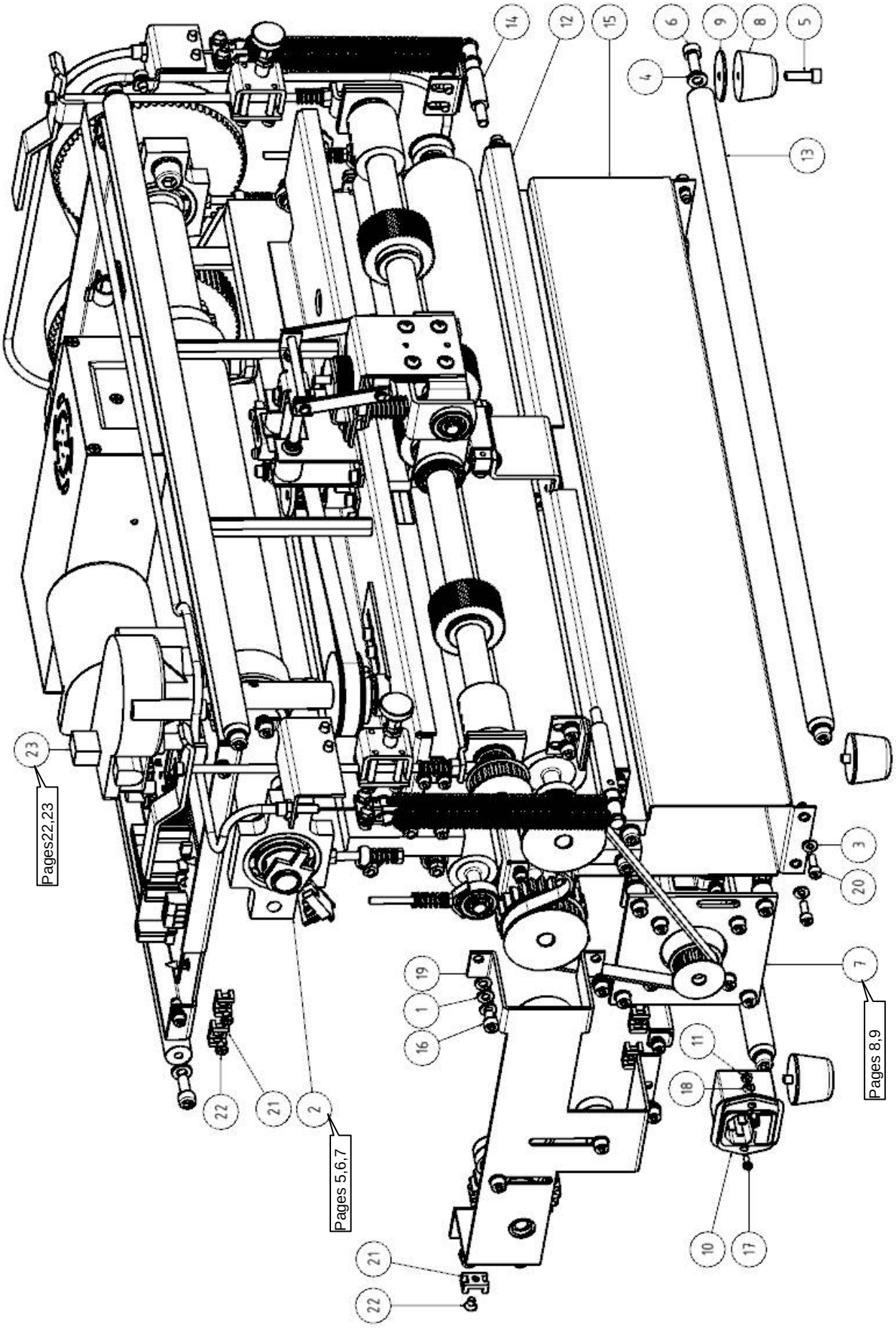
14
12
15
6
9
8
5
4
13
23
Pages22,23
3
20
7
Pages 8,9
19
1
16
11
18
22
21
2
Pages 5,6,7
10
17
21
22

Assembling of mechanisms				
Pos.	Pcs	Catalogue Number	Name	
1	100	311 21 407/2	Washer 5,3x10x1	
2	2	Pages 5,6,7	Cutting mechanism	
3	90	311 21 412/2	Washer 4,3	
4	31	311 21 414/2	Washer 6,4x12x1,5	
5	18	309 10 305/2	Screw M5x16 VS	
6	12	309 10 182/0	Screw M6x16 VS	
7	1	Pages 8,9	Paper Moving	
8	4	273 00 002/0	Rubber foot 30	
9	4	311 29 682/2	Washer 5,3x30x1,5	
10	1	345 50 215/0	Outlet	
11	6	311 11 384/2	Nut M3	
12	2	571 46 269	Base of paper separator	
13	4	571 33 060	Distance axe	
14	1	571 22 862	Pin of feeding table	
15	1	571 75 168	Sheet metal of drawer	
16	29	309 10 201/0	Screw M5x8 VS	
17	4	309 02 130/2	Screw M3x8 K	
18	6	311 21 406/5	Washer 3,2x7x0,5	
19	1	571 46 325a	Sheet metal of gearing	
20	51	309 10 307/2	Screw M4x12 VS	
21	6	345 00 254/0	Holder of tightening stripes	
22	10	309 11 206/2	Screw M4x6 K	
23	1	Pages 22,23	Holder of electronic parts	

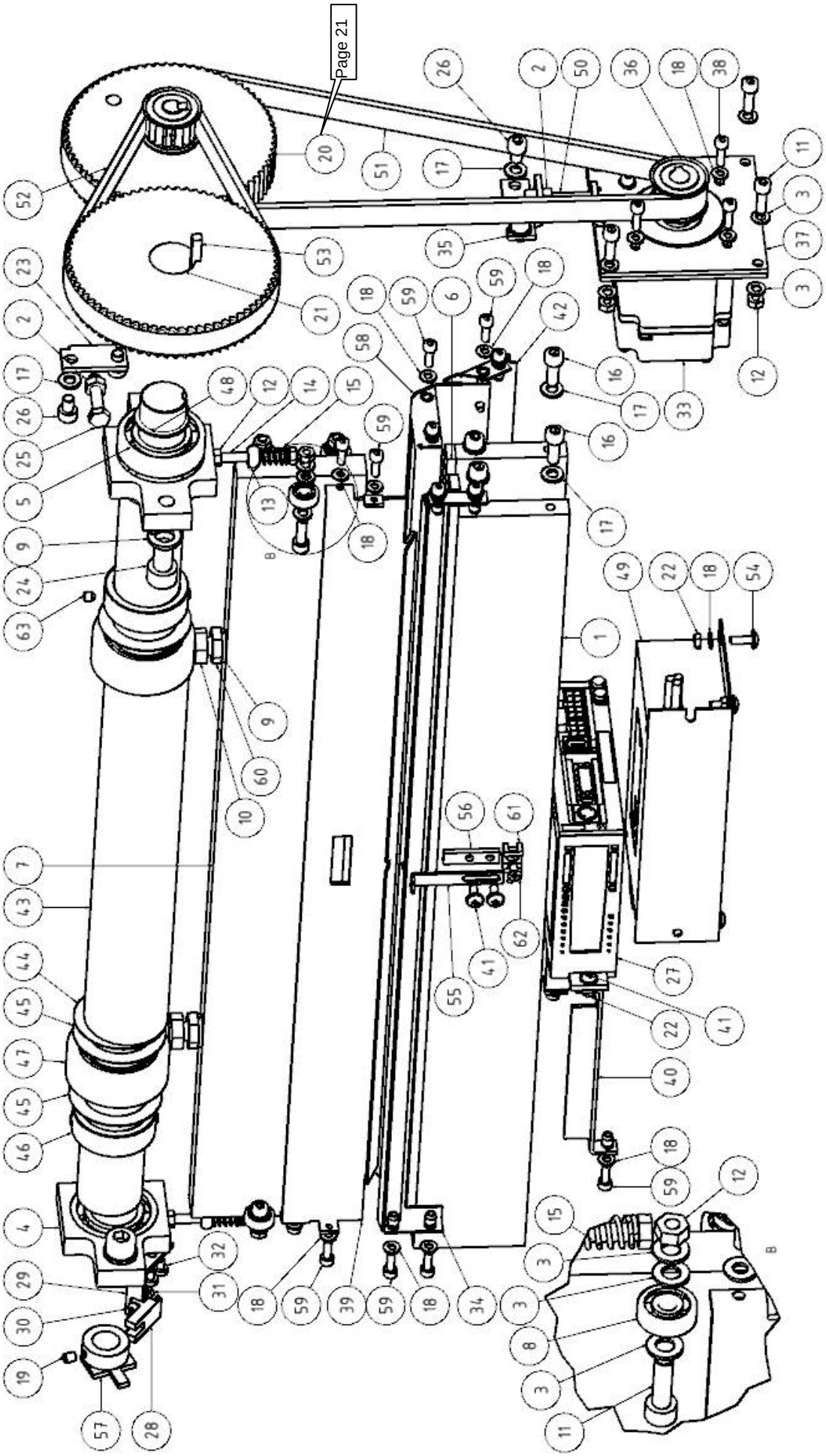
Page 21
B
B

Cutting mechanism				
Pos.	Pcs	Catalogue Number	Name	
1	2	571 33 061	Lower bar	
2	6	311 11 378/2	Nut M6	
3	26	311 21 407/2	Washer 5,3x10x1	
4	2	580 23 923	Bearing housing	
5	2	324 00 054/0	Single-row ball bearing 6005-2Z	
6	2	722 00 014/0	Washer of tools 532 x 12 x 5 mm	
7	1	571 33 064	Upper ram	
8	6	324 00 004/0	Single-row ball bearing 625	
9	6	311 28 419/2	Spring washer 10	
10	2	309 04 030/2	Screw M10x1x20 S	
11	10	309 10 305/2	Screw M5x16 VS	
12	12	311 11 377/2	Nut M5	
13	2	309 06 311/2	Eye screw M5x15	
14	2	309 04 329/2	Screw M5x45 SO	
15	2	315 70 178/0	Compression spring	
16	4	309 10 182/0	Screw M6x16 VS	
17	20	311 21 414/2	Washer 6,4x12x1,5	
18	33	311 21 412/2	Washer 4,3	
19	2	309 05 070/0	Grub screw M5x6 VS	
20	1	Page 21	Gearing of eccentric shaft	
21	1	580 23 828	Belt pulley HTD 72-5M-15	
22	10	311 11 376/2	Nut M4	
23	1	571 46 285	Locking sheet metal	
24	4	309 10334/2	Screw M10x16 VS	
25	1	309 04 301/2	Screw M6x30	
26	4	309 10 343/2	Screw M6x8 VS	
27	1	571 59 010	Servo driver including programme	
28	1	345 30 148/0	Sensor	
29	1	571 46 267	Holder of sensor of eccentric shaft	
30	2	309 11 264/2	Screw M3x8 K	
31	2	311 11 384/2	Nut M3	
32	2	309 11 209/2	Screw M4x6 K	
33	1	342 00 017/0	Servo motor-R88M_G20030H	
34	1	571 49 871a	Sheet metal of guidance	
35	1	571 46 333	Locking of servo driver	
36	1	571 33 079	Belt pulley modified 1 18HTD	
37	1	571 49 867	Chassis of servo motor	
38	4	309 10 368/2	Screw M4x14 VS	
39	1	571 49 870a	Sheet metal of guidance	
40	1	571 49 872	Holder of driver	
41	4	309 09 327/2	Screw M4x10 KP	
42	1	571 49 874	Back sheet metal of table	
43	1	571 33 062	Eccentric shaft	
44	2	571 75 391	Washer of eccentric shaft 2	

45	4	571 75 289	Washer of eccentric shaft	
46	2	571 33 112	Retaining ring	
47	2	324 00 061/0	Needle bearing NAO 35x55x20	
48	2	311 44 477/0	Retaining ring 25	
49	1	342 00 020/0	Filter AXFIM 1010-RE-LL	
50	1	309 10 352/2	Screw M6x30 VS	
51	1	272 00 035/0	Belt HTD-740	
52	1	272 00 034/0	Belt HTD-500	
53	1	571 21 424	Wedge L=36	
54	4	309 09 328/2	Screw M4x12 KP	
55	1	571 46 426	Lower holder of fibre-optic cable	
56	1	571 46 428	Washer of holder	
57	1	571 49 948	Cam assembled	
58	1	571 49 873	Back guidance sheet metal	
59	19	309 10 307/2	Screw M4x12 VS	
60	2	311 12 601/2	Nut M10-low,fine thread	
61	1	345 00 254/0	Holder of tightening stripes	
62	1	309 02 284/2	Screw M4x8 K	
63	4	309 05 266/0	Grub screw M5x6 VSH	

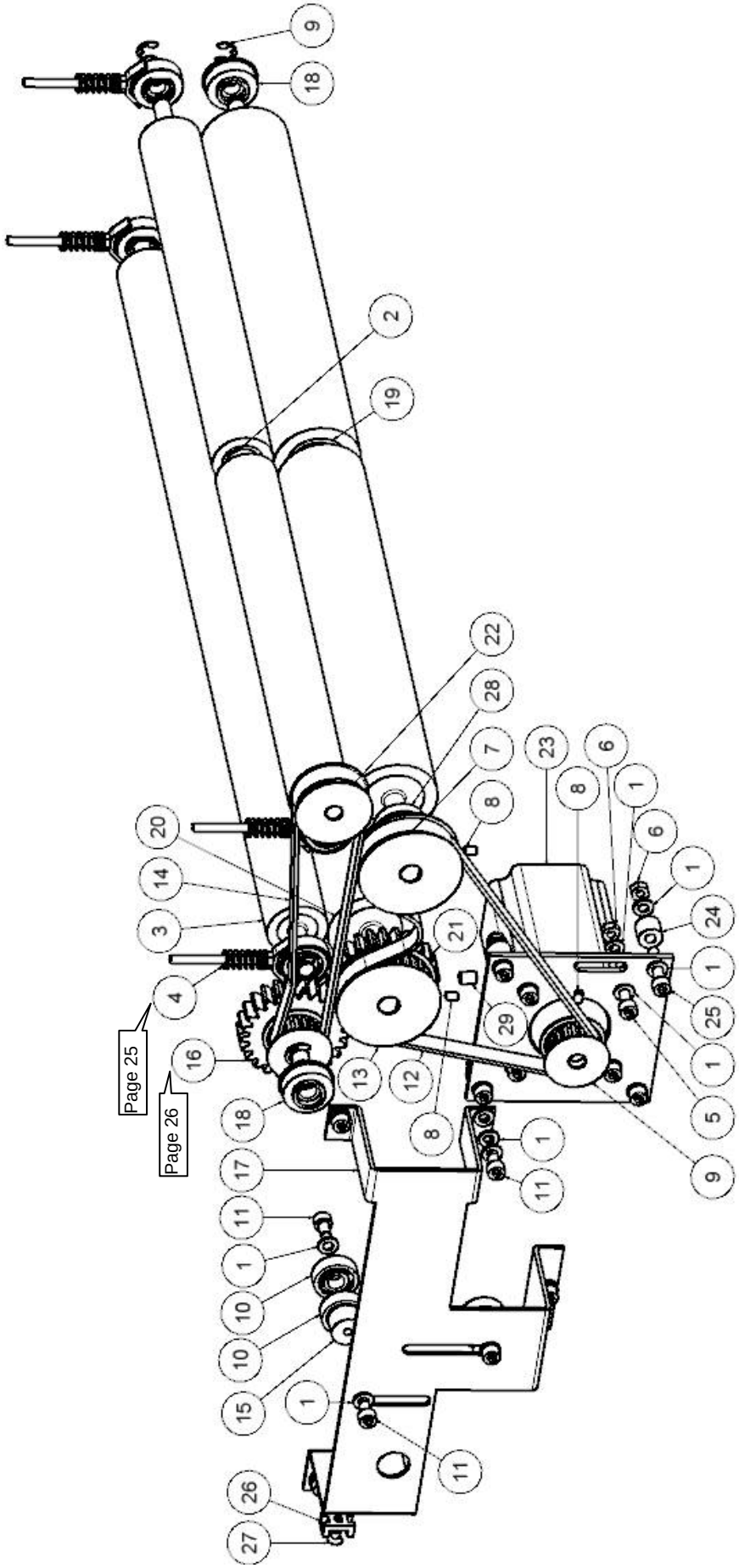
9
18
2
19
22
28
7
8
23
8
6
1
6
1
24
1
25
1
5
9
20
14
3
4
Page 25
Page 26
16
18
17
11
1
10
10
15
1
11
26
27
21
29
13
12
8
1
11

Paper Moving				
Pos.	Pcs	Catalogue Number	Name	
1	35	311 21 407/2	Washer 5,3x10x1	
2	1	571 49 936	Front pressure roller	
3	1	571 49 676	Back pressure roller	
4	4	Page 25	Arm of stressing	
5	4	309 10 305/2	Screw M5x16 VS	
6	8	311 11 377/2	Nut M5	
7	1	571 33 081	Belt pulley modified 30	
8	5	309 05 238/2	Grub screw M4x6 VS	
9	6	311 42 450/0	Retaining ring 6	
10	12	324 00 009/0	Bearing 608-2Z	
11	9	309 10 201/0	Screw M5x8 VS	
12	1	272 00 033/0	Belt 2 T5-480	
13	1	571 33 152	Belt pulley 2 modified 30	
14	1	272 00 009/0	Belt T5 - 400	
15	2	571 22 824	Pin	
16	1	Page 26	Gearing assembled	
17	1	571 46 325a	Gearing sheet metal	
18	4	220 29 861	Bushing 2	
19	1	571 49 935	Front feeding roller	
20	2	571 49 675	Back feeding roller	
21	1	571 33 173	Toothed wheel 2	
22	1	571 33 176	Belt pulley T5-22 modified	
23	1	571 48 748	Stepping motor modified	
24	4	571 22 883	Distance roller of stepping motor	
25	4	309 10 181/2	Screw M5x25 VS	
26	1	345 00 254/0	Holder of tightening stripes	
27	1	309 11 206/2	Screw M4x6 K	
28	2	571 59 002	Housing assembled	
29	1	309 05 075/0	Grub screw M6x8 VS	

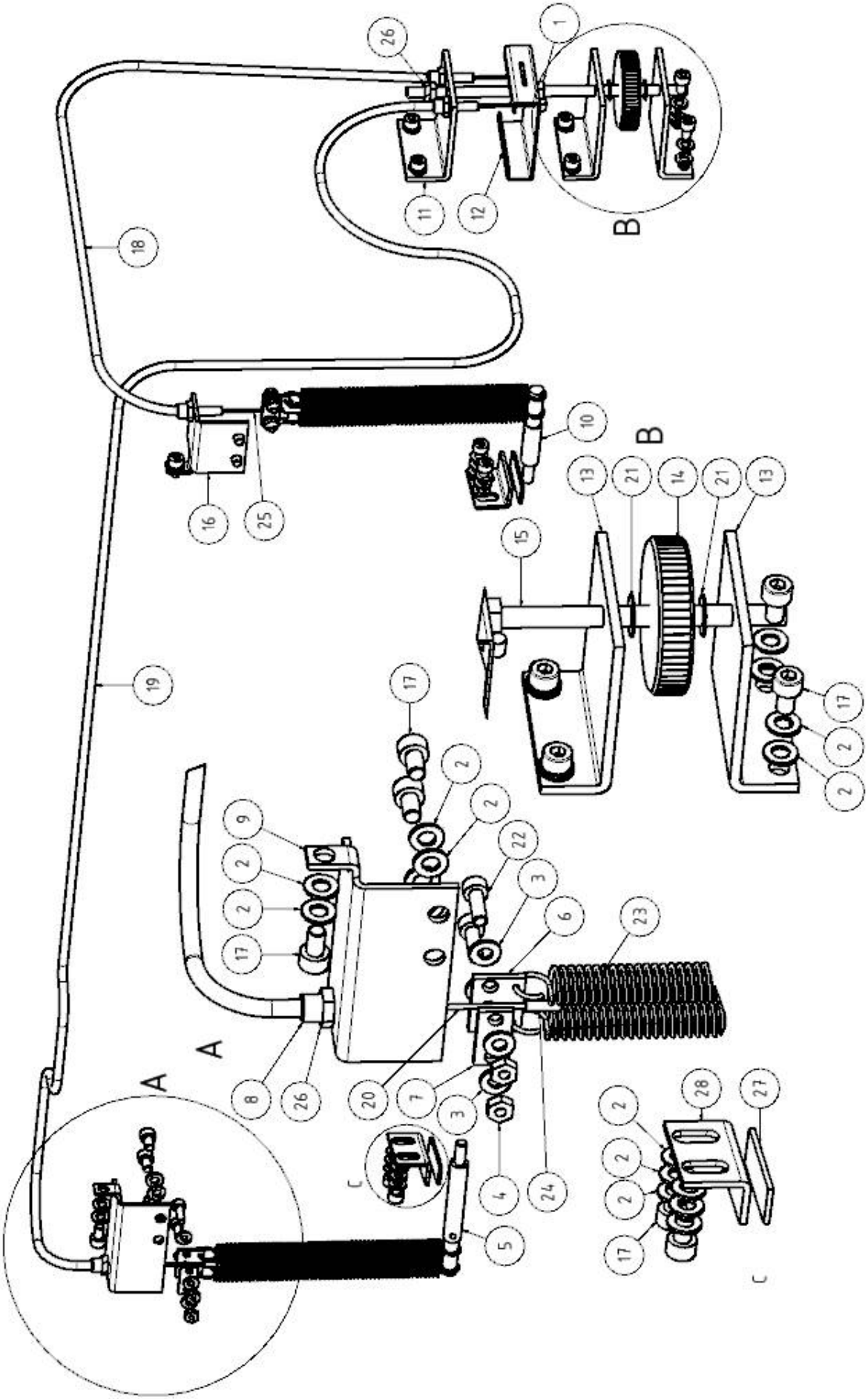
26
1
11
12
B
18
10
B
16
25
13
21
14
21
13
15
19
17
2
2
2
9
2
22
2
3
17
6
23
A
A
8
26
20
7
3
28
27
2
2
2
4
24
5
17
C
C

Tightening system of feeding table				
Pos.	Pcs	Catalogue Number	Name	
1	2	311 11 378/2	Nut M6	
2	36	311 21 407/2	Washer 5,3x10x1	
3	10	311 21 412/2	Washer 4,3	
4	4	311 11 376/2	Nut M4	
5	1	571 22 861	Table pin 1	
6	2	571 46 331	Sheet metal of brake cable	
7	2	571 46 332	Sheet metal of brake cable 2	
8	4	401 00 003/0	Screw of bowden cable	
9	1	571 46 327	Holder of bowden cable 1	
10	1	571 22 862	Pin of table 2	
11	1	571 46 329	Chassis of bowden	
12	1	571 75 288	Finger	
13	2	571 46 330	Pressure nut	
14	1	571 33 134	Nut of springs	
15	1	571 21 421	Threaded rod	
16	1	571 46 328	Holder of bowden cable 2	
17	16	309 10 201/0	Screw M5x8 VS	
18	1	401 00 001/0	Bowden cable 1 L -0,52 m	
19	1	401 00 001/0	Bowden cable 2 L- 1,2 m	
20	1	401 00 002/0	Brake cable 2	
21	2	212 28 020	Washer 6,1x12x0,5	
22	4	309 10 307/2	Screw M4x12 VS	
23	4	315 70 163/0	Tension spring	
24	2	401 00 004/0	Brake cable ending	
25	1	401 00 005/0	Brake cable 1	
26	6	311 12 363/2	Nut M6 low	
27	2	571 48 625	Rubber of table	
28	2	571 46 324	Stop of table	

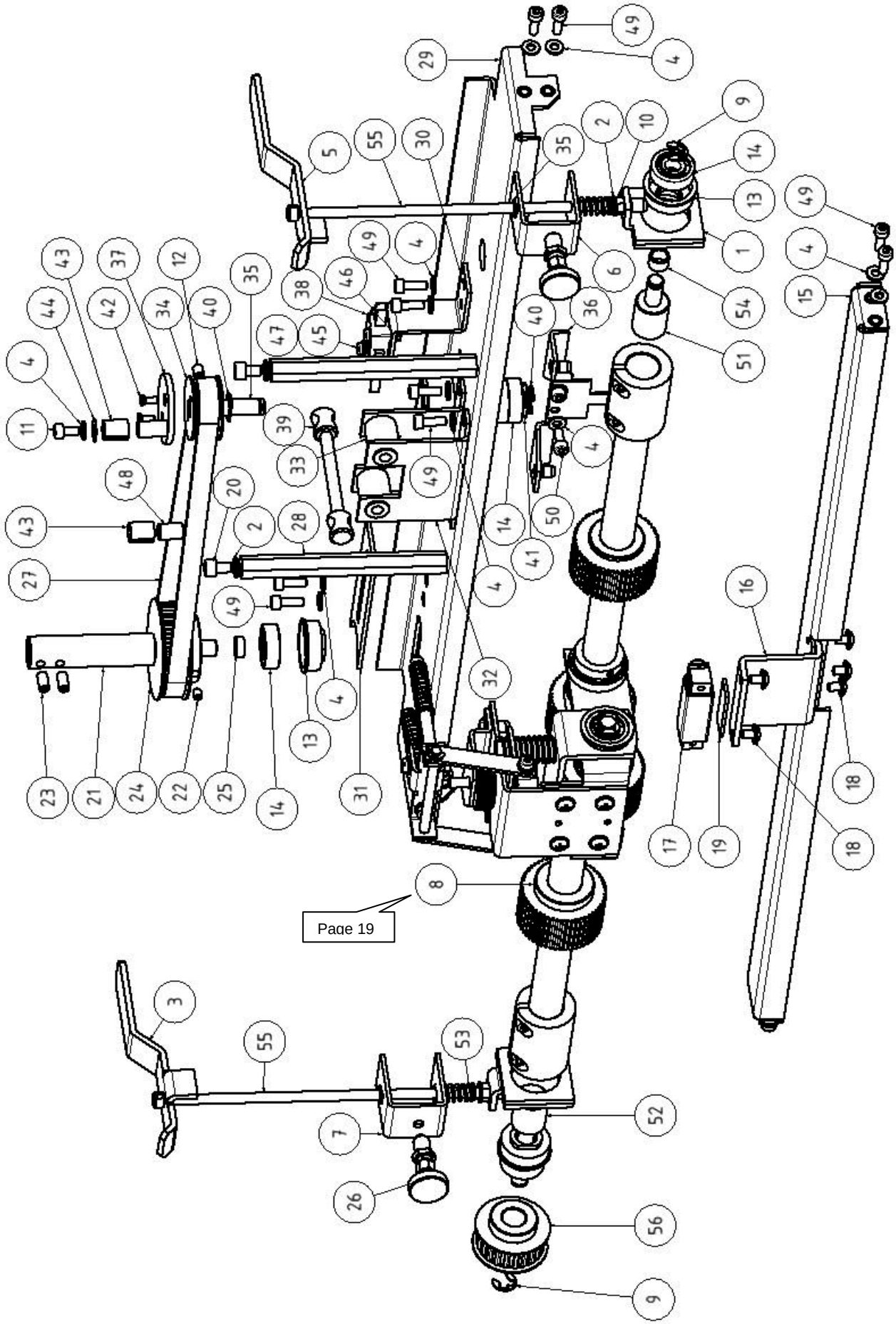
Page 19

Friction feeding				
Pos.	Pcs	Catalogue Number	Name	
1	2	571 49 689	Calliper assembled	
2	5	311 21 407/2	Washer 5,3x10x1	
3	1	571 46 275	Lever of calliper 1	
4	37	311 21 412/2	Washer 4,3	
5	1	571 46 326	Lever of calliper 2	
6	1	571 46 354a	Pin stop 1	
7	1	571 46 355a	Pin stop 2	
8	1	Page 19	Feeding shaft and head	
9	4	311 42 450/0	Locking washer for shaft 6	
10	2	311 11 377/2	Nut M6	
11	3	309 10 286/2	Screw M4x8 VS	
12	1	309 05 070/0	Grub screw M5x6 VS	
13	5	220 23 365	Bushing 1	
14	7	324 00 009/0	Bearing 608-2Z	
15	1	571 49 866	Chassis of paper separator assembled	
16	1	571 46 247	Chassis of paper separator 2	
17	1	571 49 865	Paper separator assembled	
18	5	309 09 312/2	Screw M4x6 KP	
19	1	571 48 625	Rubber of table	
20	4	309 10 201/0	Screw M5x8 VS	
21	1	571 33 057	Axis of paper separator drive	
22	1	309 14 185/2	Grub screw M4x6 VSH	
23	2	309 05 249/2	Grub screw M5x10 VS	
24	1	571 33 082	Belt pulley 2 modified 30	
25	1	571 22 892	Distance ring	
26	2	571 49 889	Calliper lock	
27	1	272 00 033/0	Belt T5-480	
28	2	571 22 879	Connection rod	
29	1	571 49 853	Holder of rod assembled	
30	1	571 46 268	Holder of micro switch	
31	1	571 46 258	Stop of separator axis	
32	2	571 46 286	Holder of connection rod	
33	2	571 33 069	Guidance of connection rod	
34	1	571 33 083	Belt pulley T5-16	
35	1	571 22 837	Axis of belt pulley	
36	1	571 59 050	Holder of sensor	
37	1	571 49 856	Misalignment of connection rod	
38	1	345 30 153/0	Micro switch ZIPPY VM-5 5A	
39	1	571 22 832	Connection rod 2	
40	2	311 42 443/0	Retaining ring 7	
41	1	200 06 265	Washer 8,2x18x0,2	
42	2	309 02 130/2	Screw M3x8 K	
43	2	323 00 013/0	Sliding bearing KU0812	
44	1	200 06 115	Washer 6,1x12x0,2	

45	2	309 11 208/2	Screw M3x16 K	
46	2	311 11 384/2	Nut M3	
47	4	311 21 406/5	Washer 3,2x7x0,5	
48	1	571 22 863	Pin of head	
49	20	309 10 307/2	Screw M4x12 VS	
50	2	309 10 180/0	Screw M4x10 VS	
51	1	571 33 188a	Shaft of pressure - part 2	
52	1	571 33 189a	Shaft of pressure - part 3	
53	2	315 70 181/0	Compression spring	
54	2	220 22 366	Ring	
55	2	571 21 400a	Axis of calliper	
56	1	571 59 089	Belt pulley assembled	

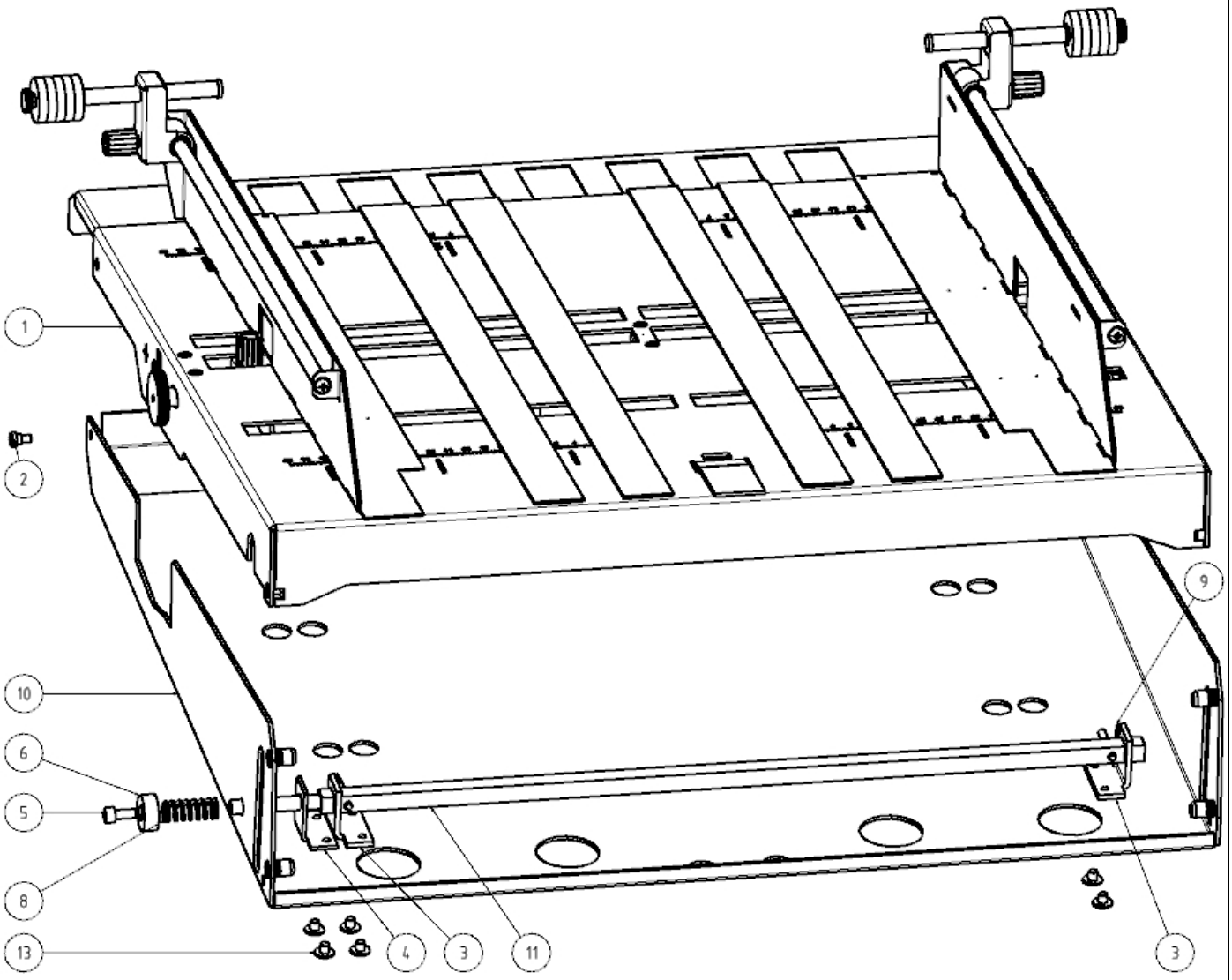

571 49 684a Feeding table assembled				
Pos.	Pcs	Catalogue Number	Name	
1	1	571 49 685a	Board of feeding table assembled	
2	2	309 22 338/2	Screw M4x3 DIN 923	
3	2	571 46 242	Square guide	
4	1	571 46 253	Square guide 2	
5	1	309 10 282/2	Screw M5x12 VS	
6	1	571 33 073	Base of spring	
7	1	311 42 443/0	Locking washer for shaft 7	
8	1	315 80 075/0	Compression spring	
9	2	571 48 691	Absorbing rubber	
10	1	571 49 846a	Base board assembled	
11	1	571 49 847	Table locking	
12	2	212 28 020	Washer 6,1x12x0,5	
13	6	309 17 692/2	Screw M5x5 KP	

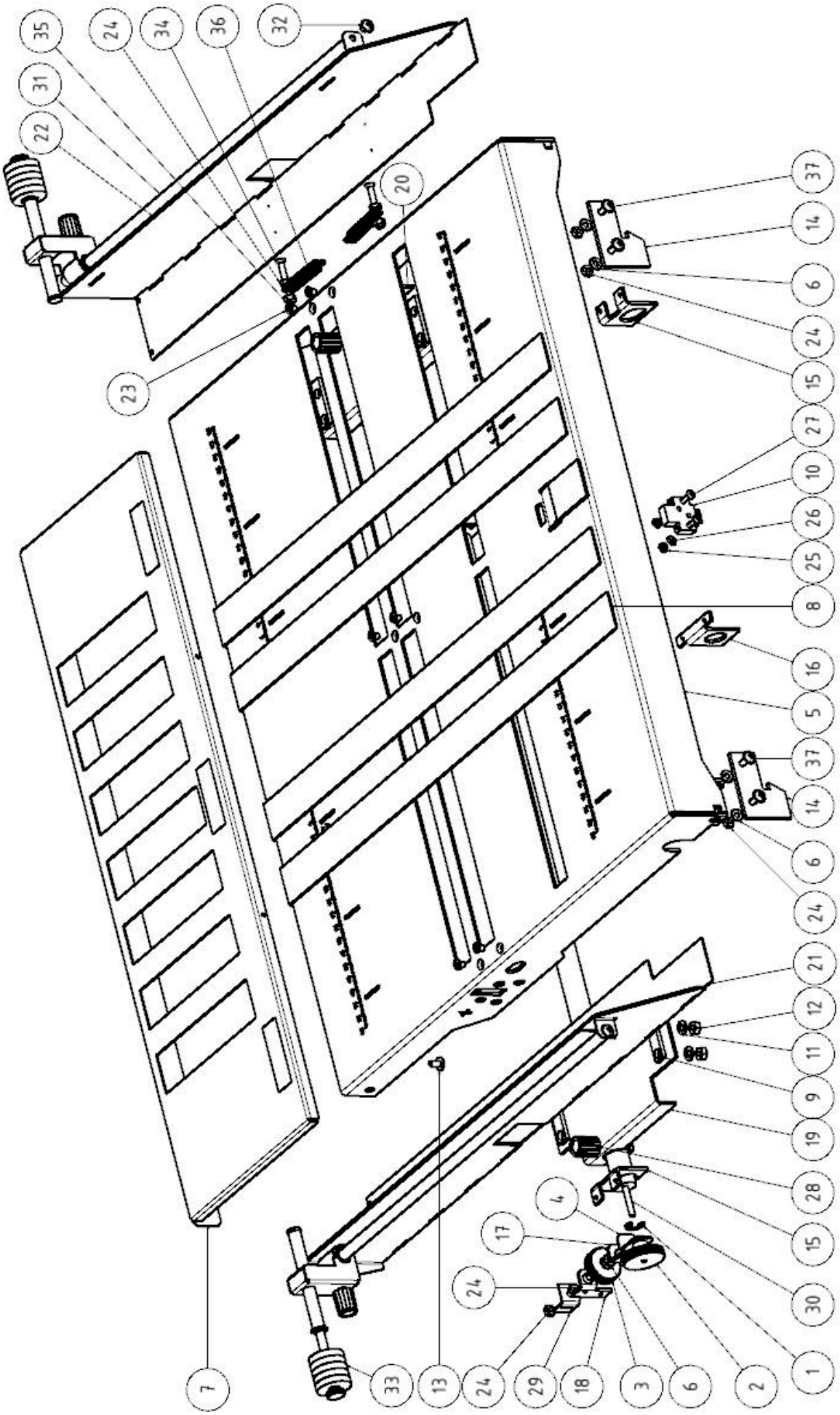
35
24
34
36
32
31
22
20
23
37
14
6
24
15
27
10
26
25
8
16
5
37
14
6
24
21
12
11
9
19
28
15
30
1
2
6
3
18
29
24
13
33
7
4
17
24

571 49 685a Table desk				
Pos.	Pcs	Catalogue Number	Name	
1	1	311 42 443/0	Retaining ring 7	
2	1	571 33 131	Nut of feeding	
3	1	571 33 133	Nut of feeding – slight turning	
4	1	571 49 841	Axis of feeding assembled	
5	1	571 49 683a	Board of table assembled.	
6	6	311 21 412/2	Washer 4,3	
7	1	571 49 687	Telescopic table	
8	4	571 49 737	Magnetic distance	
9	4	571 46 323	Washer of T-squares	
10	1	342 00 013/0	Sensor OMRON-EE SY672	
11	8	311 21 407/2	Washer 5,3x10x1	
12	8	311 11 377/2	Nut M5	
13	2	309 09 229/2	Screw M4x8 KP	
14	2	571 46 245	Lock of table	
15	2	571 46 237	Guide - ellipse	
16	1	571 46 238	Bracket of shaft	
17	1	571 46 240	Holder of nut 1	
18	1	571 46 241	Holder of nut 2	
19	1	571 49 733	„U“ guide assembled 1	
20	1	571 49 734	„U“ guide assembled 2	
21	1	571 49 735	Right T-square	
22	1	571 49 736	Left T-square	
23	10	309 11 206/2	Screw M4x6 K	
24	8	311 11 376/2	Nut M4	
25	2	311 11 384/2	Nut M3	
26	2	311 21 406/5	Washer 3,2x7x0,5	
27	2	309 11 207/2	Screw M3x12 K	
28	2	570 39 981	Locking screw	
29	1	571 75 317	Position indicator	
30	1	571 49 842a	Axis of T-squares welded	
31	2	571 22 870	Axis of T-squares	
32	4	309 09 312/2	Screw M4x6 KP	
33	2	571 49 845	Brake assembled	
34	2	309 11 205/2	Screw M4x16 K	
35	2	311 12 365/2	Low self-locking nut M4	
36	2	315 70 173/0	Tension spring	
37	4	309 09 327/2	Screw M4x10 KP	

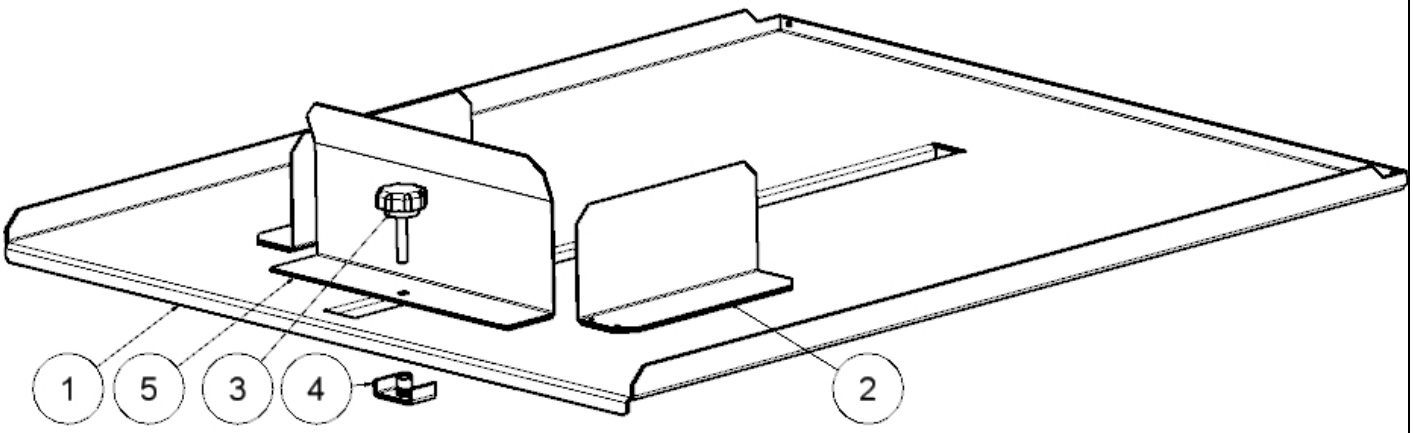

Delivery table assembled				
Pos.	Pcs	Catalogue Number	Name	
1	1	571 46 262	Back table	
2	2	571 49 884	Side T-square	
3	1	321 00 020/0	Screw VZJ 40 M6x30	
4	1	571 49 886	Locking nut	
5	1	571 49 885	Back T-square assembled	

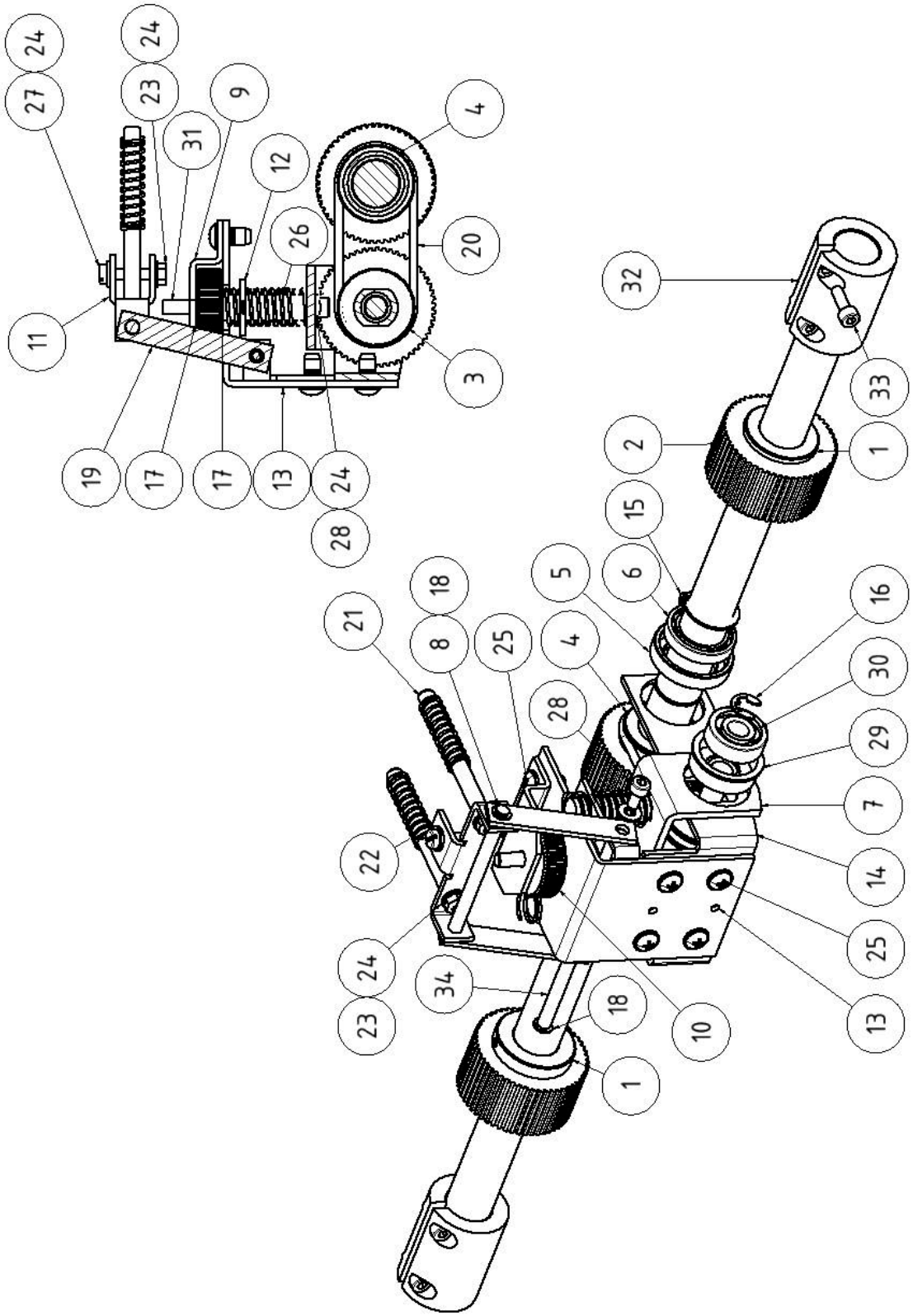
24
27
24
23
31
9
12
26
4
20
3
11
19
17
17
13
24
28
32
33
2
1
15
6
5
4
16
30
29
7
14
25
13
10
18
1
34
23
24
22
28
25
8
18
21

Feeding shaft and head				
Pos.	Pcs	Catalogue Number	Name	
1	2	571 49 858	Auxiliary spool	
2	4	273 00 080/1	Rubber Feeding wheel	
3	1	571 49 811	Front spool	
4	1	571 49 812	Feeding spool	
5	2	571 33 136	Bushing 2	
6	2	324 00 040/1	Single-row ball bearing 61803-2Z	
7	1	571 46 277	„U“ sheet metal of pressure arm	
8	2	571 21 401	Axis of connection rod	
9	1	571 46 257	Support of pressure 2	
10	1	571 33 056	Nut of pressure	
11	1	571 46 279	„U“ sheet metal of connection rod	
12	1	571 46 255	Sheet metal of springing	
13	1	571 49 861	Support of pressure	
14	1	571 49 860	Bracket of arm	
15	2	311 43 440/0	Retaining ring 16	
16	2	311 42 450/0	Locking washer for shaft 6	
17	2	212 28 020	Washer 6,1x12x0,5	
18	3	311 42 469/0	Locking washer for shaft 3,2	
19	2	571 46 278	Arm of connection rod	
20	1	272 01 051/0	Round belt L=170	
21	2	571 21 398	Auxiliary pushing	
22	2	315 30 094/0	Compression spring	
23	3	311 11 376/2	Nut M4	
24	6	311 21 412/2	Washer 4,3	
25	6	309 09 229/2	Screw M4x8 KP	
26	2	315 70 177/0	Spring L0=34_D1=14,5_d=1	
27	1	309 01 136/5	Screw M4x20 D	
28	2	309 10 286/2	Screw M4x8 VS	
29	2	220 23 365	Bushing 1	
30	2	324 00 009/0	Bearing 608-2Z	
31	1	309 10 393/2	Screw M5x30 VSČ	
32	2	571 33 190a	SPOJKA	
33	4	309 10 307/2	ŠROUB M4x12 VS	
34	1	571 21 433	OSA TÁHLA 2	

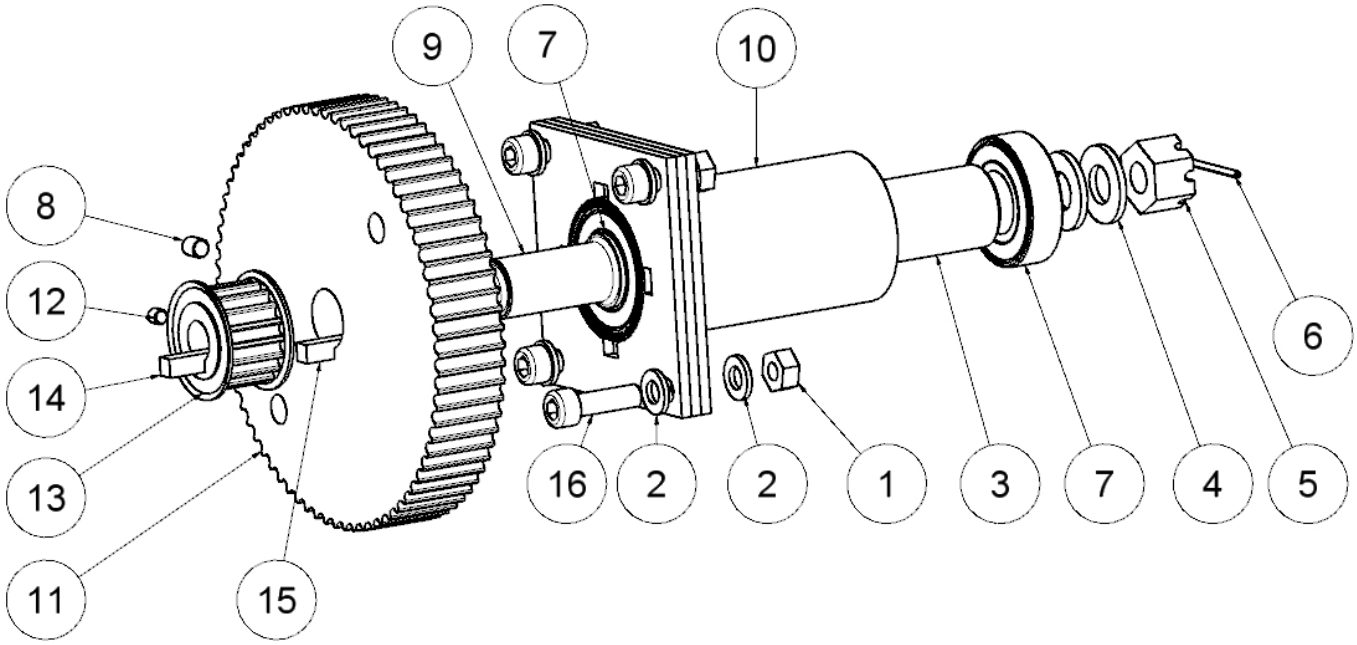

Gearing of eccentric shaft				
Pos.	Pcs	Catalogue Number	Name	
1	4	311 11 378/2	Nut M6	
2	8	311 21 414/2	Washer 6,4x12x1,5	
3	1	580 33 002	Distance pipe	
4	2	311 21 415/5	Washer 10,5x21x2	
5	1	311 18 693/2	Castle nut M10	
6	1	311 00 459/5	Split pin 2x25	
7	2	324 00 036/1	Bearing 6003-2RSH	
8	1	309 05 070/0	Grub screw M5x6 VS	
9	1	571 33 066	Axis of gearing	
10	1	571 49 691	Gearing housing	
11	1	571 33 078	Belt pulley HTD 72	
12	1	309 14 299/0	Grub screw M4x4 VS	
13	1	571 33 080	Belt pulley modified 2 18HTD	
14	1	571 21 423	Wedge L=17,5	
15	1	571 21 422	Wedge L=27,5	
16	4	309 10 342/2	Screw M6x20 VS	

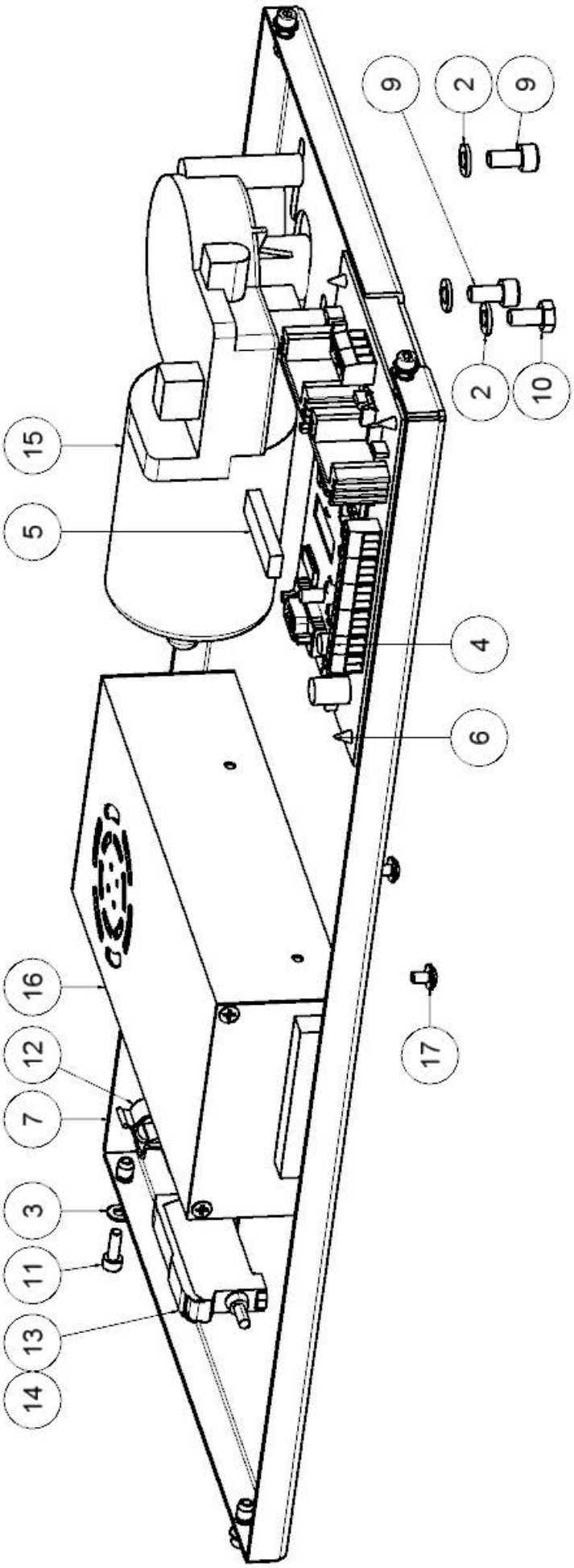
15
5
16
12
7
3
11
13
14
9
2
9
2
10
4
6
17

Holder of electronic components				
Pos.	Pcs	Catalogue Number	Name	
1	2	311 21 407/2	Washer 5,3x10x1	
2	3	311 21 414/2	Washer 6,4x12x1,5	
3	4	311 21 412/2	washer 4,3	
4	1	374 80 042/0	PC board – motor control	
5	1	373 00 044/0	Processor	
6	4	321 00 331/0	Distance column	
7	1	571 49 876	Support of motor	
8	2	309 10 201/0	Screw M5x8 VS	
9	2	309 10 278/2	Screw M6x12 VS	
10	1	309 04 065/5	Screw M6x12 S	
11	4	309 10 307/2	Screw M4x12 VS	
12	1	345 00 239/0	Self-adhesive holder	
13	1	342 00 006/1	OMRON-E3X_NA11F	
14	1	342 00 005/0	Optical fibres E32-T21 2M	
15	1	571 48 747	Motor VALEO modified	
16	1	344 00 004/0	Power supply SP 200	
17	2	309 09 312/2	Screw M4x6 KP	

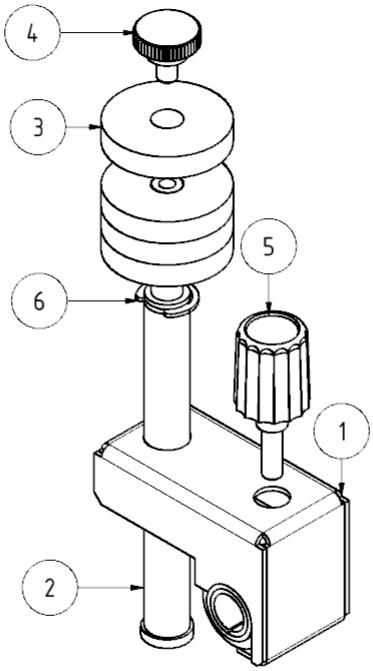

571 49 845 Brace assembled				
Pos.	Pcs	Catalogue Number	Name	
1	1	571 49 844	Base	
2	1	571 33 128	Axis	
3	5	571 33 129	Weight	
4	1	544 22 310	Screw M4	
5	1	321 00 021/0	Knurled head screw	
6	1	311 42 450/0	Ring 6 ČSN 02 2929.02	

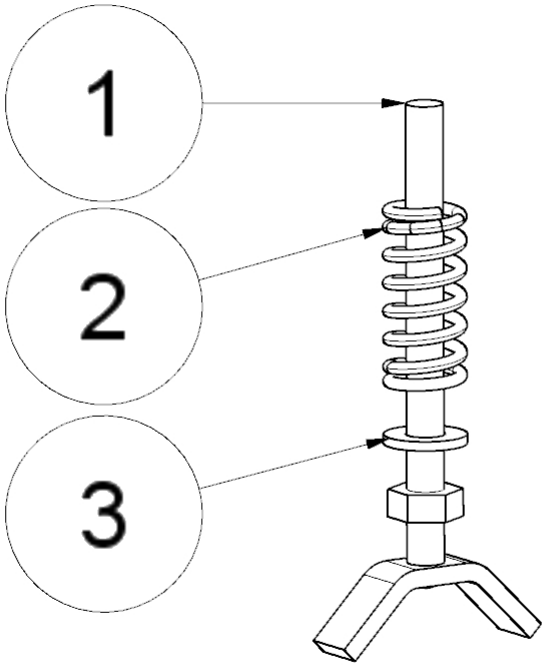

571 49 961 Arm assembled				
Pos.	Pcs	Catalogue Number	Name	
1	1	571 59 009	Support assembled	
2	1	315 70 181/0	Compression spring	
3	1	311 21 412/2	Washer 4,3	

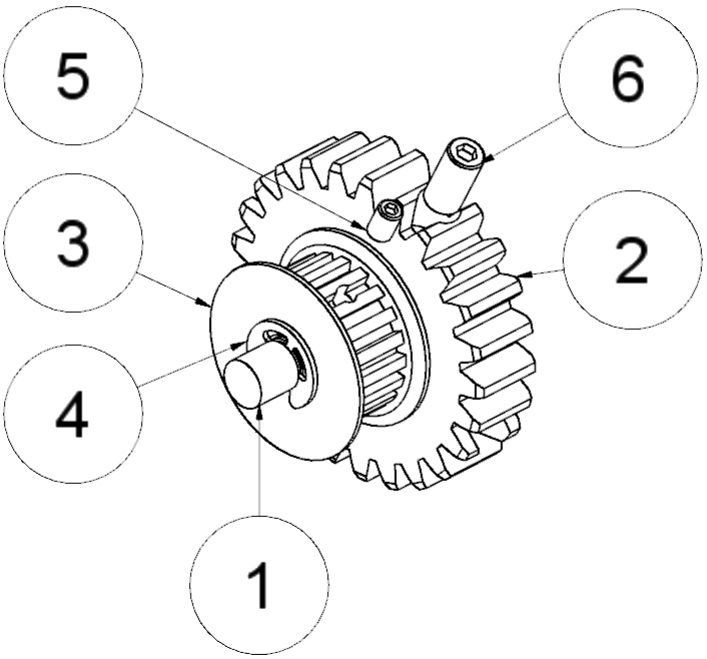

Gearing assembled				
Pos.	Pcs	Catalogue Number	Name	
1	1	571 22 864	Axis of gearing	
2	1	571 33 135	Toothed wheel	
3	1	571 33 151	Belt pulley 2 T5-16 modified	
4	2	311 42 443/0	Locking washer for shaft 7	
5	1	309 05 238/2	Grub screw M4x6 VS	
6	1	309 05 308/2	Grub screw M6x12 VS	

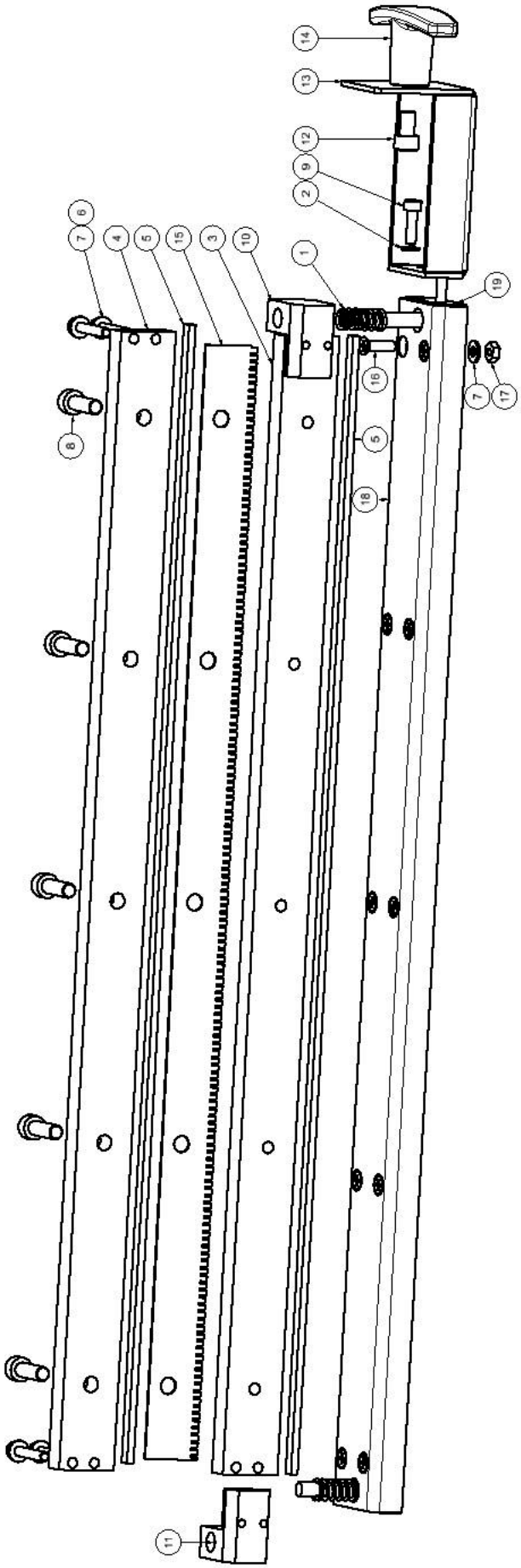
14
13
12
9
2
7
6
4
5
15
3
10
1
19
16
7
17
8
5
18
11

Perforating tool 571 49 819b				
Pos.	Pcs	Catalogue Number	Name	
1	2	315 70 181/0	Compression spring	
2	2	311 28 427/0	Spring washer 4	
3	1	571 33 169	Backbone	
4	1	571 33 170	Clamp	
5	2	571 48 725	Stripping rubber	
6	4	309 10 370/2	Screw M4x25 VS	
7	14	311 21 412/2	Washer 4,3	
8	5	309 10 342/2	Screw M6x20 VS	
9	2	309 10 368/2	Screw M4x14 VS	
10	1	571 59 048	Guide arm 1	
11	1	571 59 049	Guide arm 2	
12	1	309 10 150/2	Screw M6x10 VS	
13	1	571 46 519	Handle of tool	
14	1	321 00 043/0	Handle T	
15	1	570 48 211	Perforating knife 2:1	
16	10	309 02 035/2	Screw M4x14 K sunk	
17	10	311 11 376/2	Nut M4	
18	1	571 46 462a	Perforating area	
19	1	571 49 859a	Lower tool assembled	

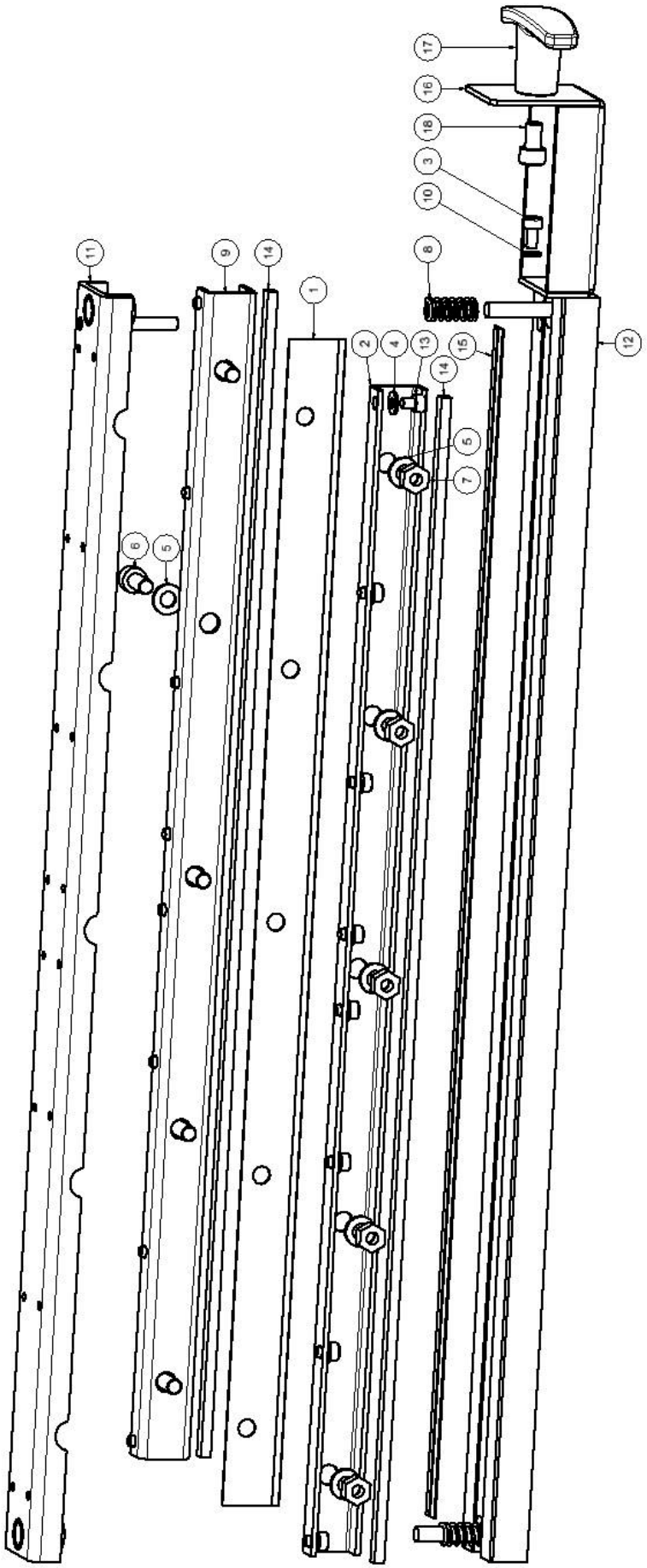
17
16
18
3
10
8
11
9
14
1
2
4
13
15
14
12
5
7
6
5

Creasing tool CITO 1x0,5 571 49 818a				
Pos.	Pcs	Catalogue Number	Name	
1	1	571 48 792	Creasing knife R0,5	
2	1	571 46 281	Side	
3	2	309 10 286/2	Screw M4x8 VS	
4	16	311 21 412/2	Washer 4,3	
5	10	311 21 414/2	Washer 6,4x12x1,5	
6	5	309 10 186/2	Screw M6x14 VS	
7	5	311 11 378/2	Nut M6	
8	2	315 70 181/0	Compression spring	
9	1	571 46 353	Back side	
10	2	311 28 427/0	Spring washer 4	
11	1	571 49 893	Upper part	
12	1	571 59 007	Lower part CITO	
13	16	309 10 390/0	Screw M4x5 VS	
14	2	701 00 006/0	Stripping rubber	
15	1	571 48 784	CITO DYNAMIC 1x0,5x470	
16	1	571 46 519	Handle of tool	
17	1	321 00 043/0	Handle T	
18	1	309 10 150/2	Screw M6x10 VS	

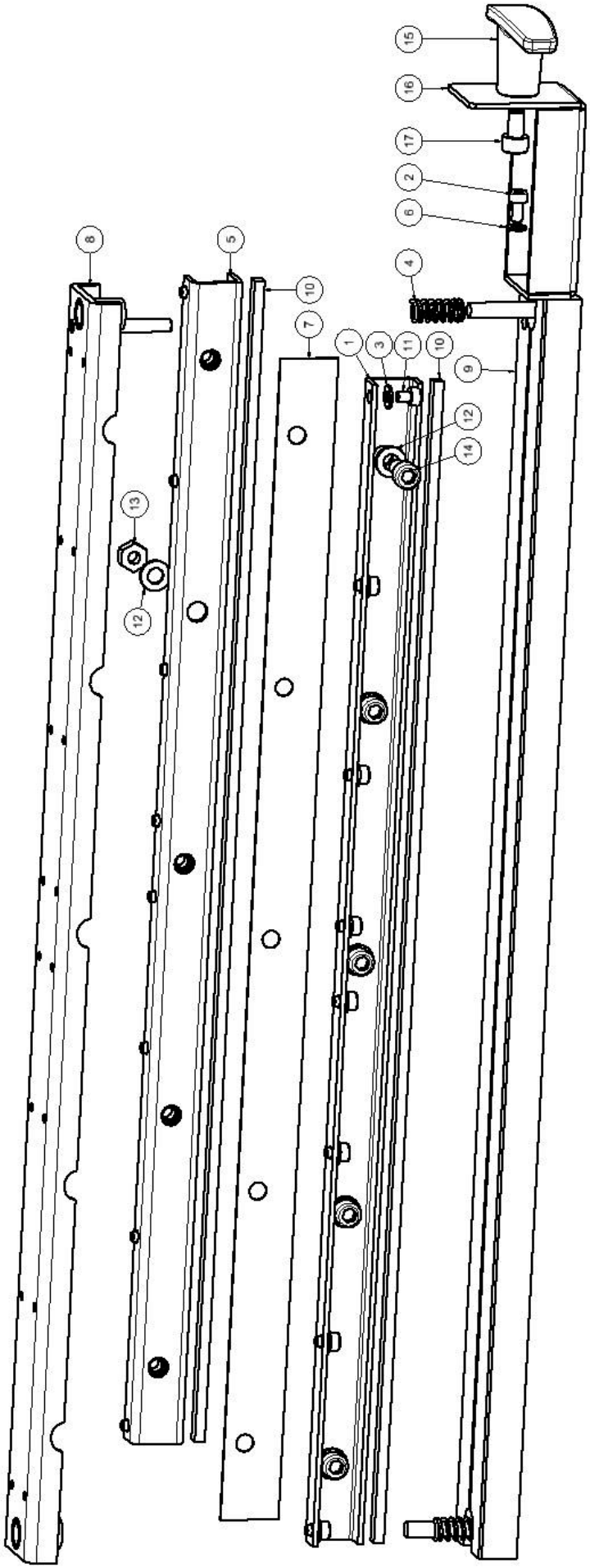
15
16
17
2
6
4
8
5
10
7
1
3
11
10
9
12
14
13
12

Creasing tool 571 49 820				
Pos.	Pcs	Catalogue Number	Name	
1	1	571 46 281	Side	
2	2	309 10 286/2	Screw M4x8 VS	
3	16	311 21 412/2	Washer 4,3	
4	2	315 70 181/0	Compression spring	
5	1	571 46 353	Back side	
6	2	311 28 427/0	Spring washer 4	
7	1	571 48 762	Creasing knife	
8	1	571 49 893	Upper part	
9	1	571 49 896	Lower part 3	
10	2	701 00 006/0	Stripping rubber	
11	16	309 10 390/0	Screw M4x5 VS	
12	10	311 21 414/2	Washer 6,4x12x1,5	
13	5	311 11 378/2	Nut M6	
14	5	309 10 278/2	Screw M6x12 VS	
15	1	321 00 043/0	Handle T	
16	1	571 46 519	Handle of tool	
17	1	309 10 150/2	Screw M6x10 VS	

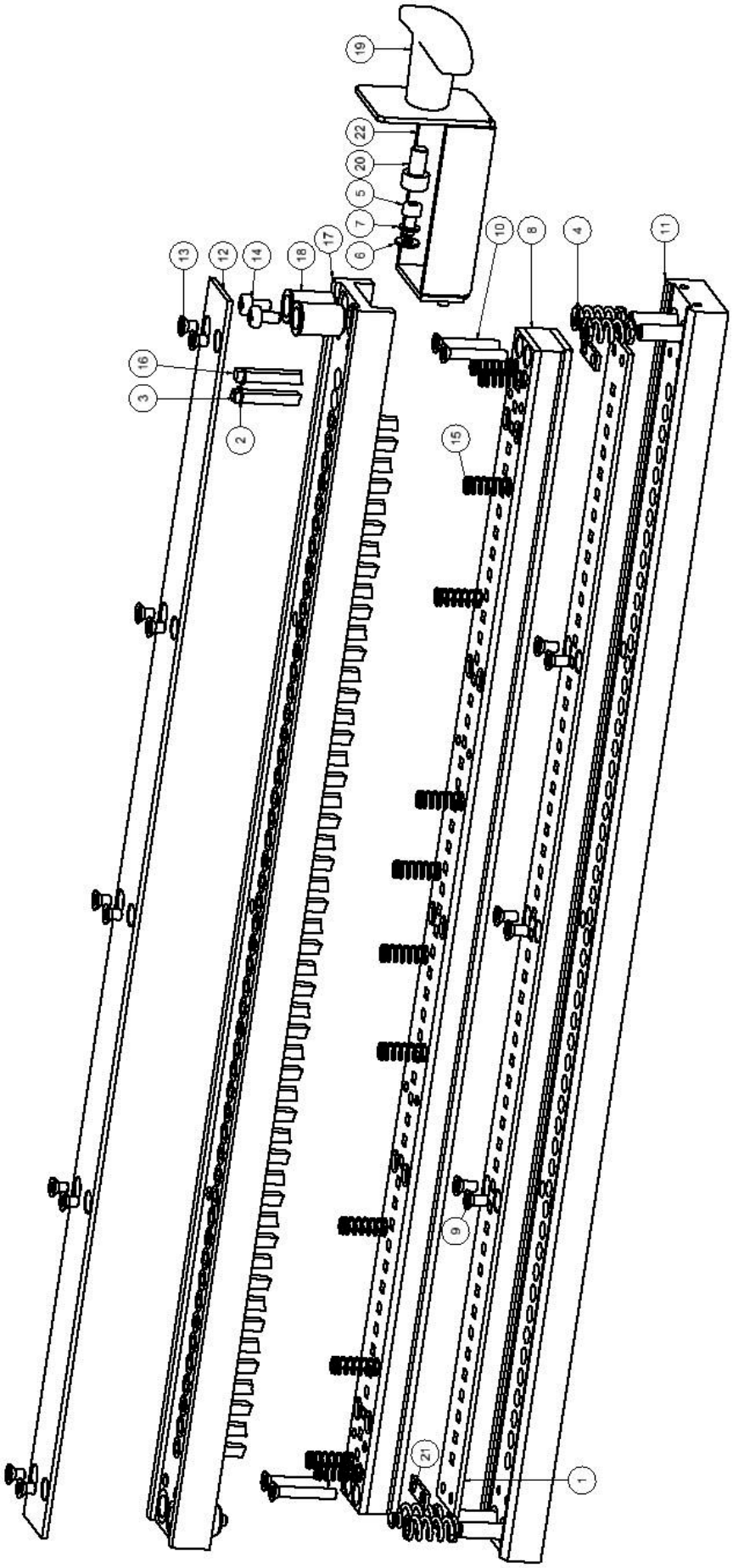
19
22
20
5
7
6
17
18
14
12
13
16
3
2
10
8
4
11
15
9
21
1

Punching tool 4x4 mm,3:1 – square 571 49 462				
Pos.	Pcs	Catalogue Number	Name	
1	1	571 46 517	Matrix	
2	52	311 42 469/0	Locking washer for shaft 3,2	
3	26	571 21 432	Punch L=26,5	
4	4	315 70 191 0	Compression spring	
5	2	309 10 286/2	Screw M4x8 VS	
6	2	311 21 412/2	Washer 4,3	
7	2	311 28 427/0	Spring washer 4	
8	1	571 59 014	Backbone of punch guiding	
9	6	309 02 284/2	Screw M4x8 K sunk	
10	4	309 02 398/2	Screw M4x25 K sunk	
11	1	571 59 016	Lower tool of punching	
12	1	571 46 518	Lid	
13	10	309 11 206/2	Screw M4x6 K sunk	
14	4	309 11 204/2	Screw M4x8 K	
15	12	315 70 170/0	Compression spring 220 24 089	
16	26	571 21 426	Punch L=26	
17	1	571 33 207	Comb	
18	4	571 59 060	Guide of tool	
19	1	321 00 043/0	Handle T	
20	1	309 10 150/2	Screw M6x10 VS	
21	2	571 46 537	Tooling distance	
22	1	571 46 737	Handle of tool	

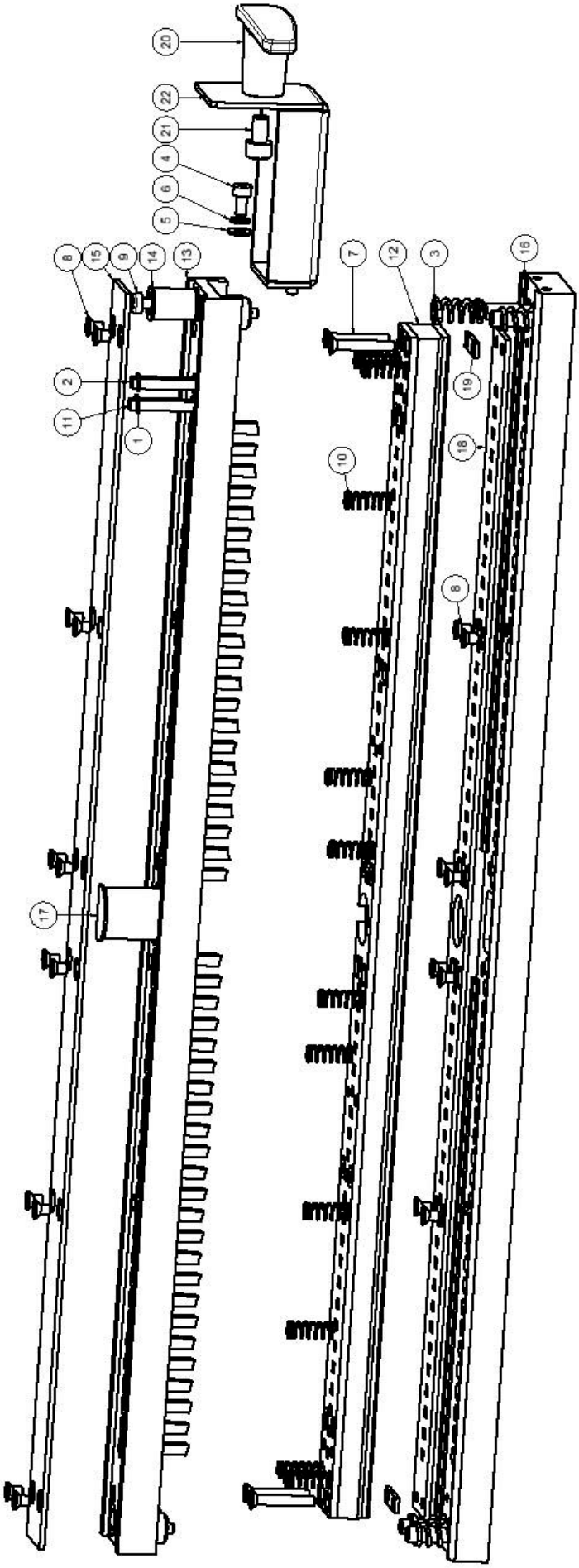
20
22
21
4
6
5
8
15
9
14
13
7
12
3
16
2
11
1
19
18
10
8
17

Punching tool 4x4 mm,3:1,calendar -square 571 40 463				
Pos.	Pcs	Catalogue Number	Name	
1	48	311 42 469/0	Locking washer for shaft 3,2	
2	24	571 21 432	Punch L=26,5	
3	4	315 70 191 0	Compression spring	
4	2	309 10 286/2	Screw M4x8 VS	
5	2	311 21 412/2	Washer 4,3	
6	2	311 28 427/0	Spring washer 4	
7	4	309 02 398/2	Screw M4x25 K sunk	
8	20	309 11 206/2	Screw M4x6 K sunk	
9	4	309 11 204/2	Screw M4x8 K	
10	12	315 70 170/0	Compression spring 220 24 089	
11	24	571 21 426	Punch 26	
12	1	571 59 043	Backbone - calendar	
13	1	571 33 219	Comb - calendar	
14	4	571 59 060	Guidance of tool	
15	1	571 46 534	Lid - calendar	
16	1	571 59 045	Lower of tool	
17	1	571 33 171	Punch - calendar	
18	1	571 46 533	Matrix - calendar	
19	2	571 46 537	Tooling distance	
20	1	321 00 043/0	Handle T	
21	1	309 10 150/2	Screw M6x10 VS	
22	1	571 46 737	Handle of tool	

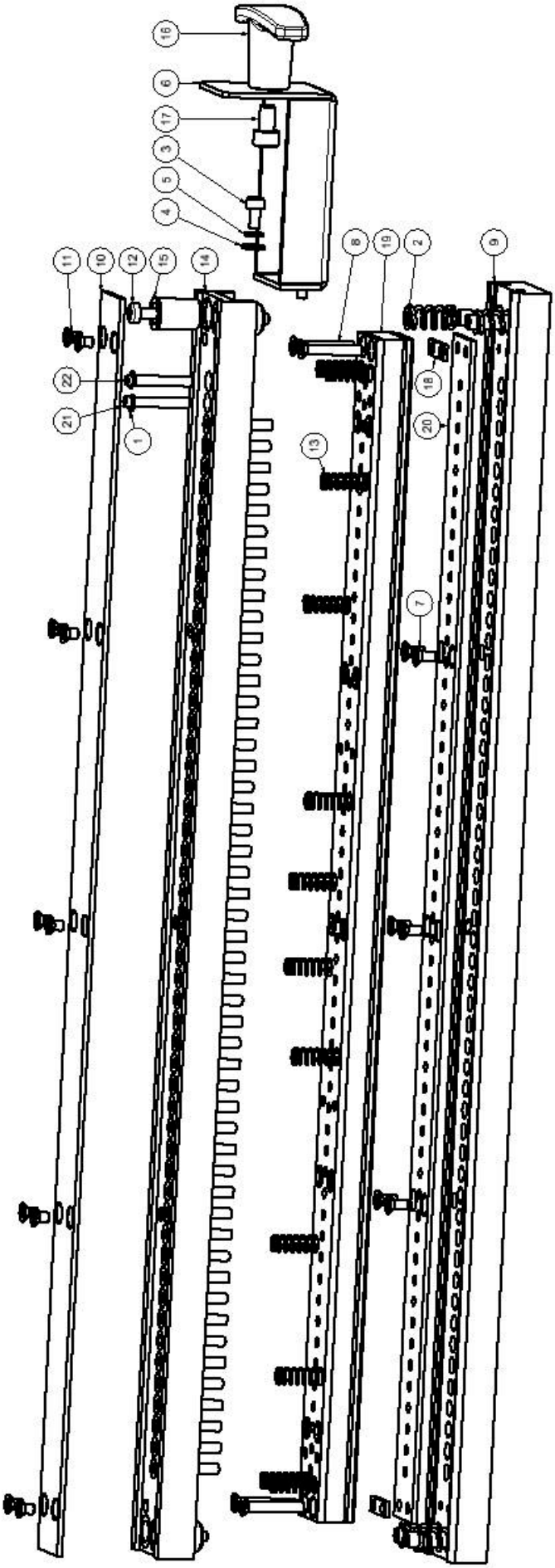
16
6
17
3
5
4
11
10
12
15
14
22
21
1
8
19
2
9
18
20
13
7

Punching tool 3:1 - round 571 40 675				
Pos.	Pcs	Catalogue Number	Name	
1	52	311 42 469/0	Locking washer for shaft 3,2	
2	4	315 70 191 0	Compression spring	
3	2	309 10 286/2	Screw M4x8 VS	
4	2	311 21 412/2	Washer 4,3	
5	2	311 28 427/0	Spring washer 4	
6	1	571 46 519	Handle of tool	
7	6	309 02 284/2	Screw M4x8 K	
8	4	309 02 398/2	Screw M4x25 K sunk	
9	1	571 59 016	Lower part of punching tool	
10	1	571 46 518	Lid	
11	10	309 11 206/2	Screw M4x6 K sunk	
12	4	309 11 204/2	Screw M4x8 K	
13	12	315 70 170/0	Compression spring 220 24 089	
14	1	571 33 207	Comb	
15	4	571 59 060	Guidance of tool	
16	1	321 00 043/0	Handle T	
17	1	309 10 150/2	Screw M6x10 VS	
18	2	571 46 537	Tooling distance	
19	1	571 59 076	Backbone of punch guiding	
20	1	571 46 729	Matrix	
21	26	571 21 443	Punch L=27	
22	26	571 21 444	Punch L=27,5	

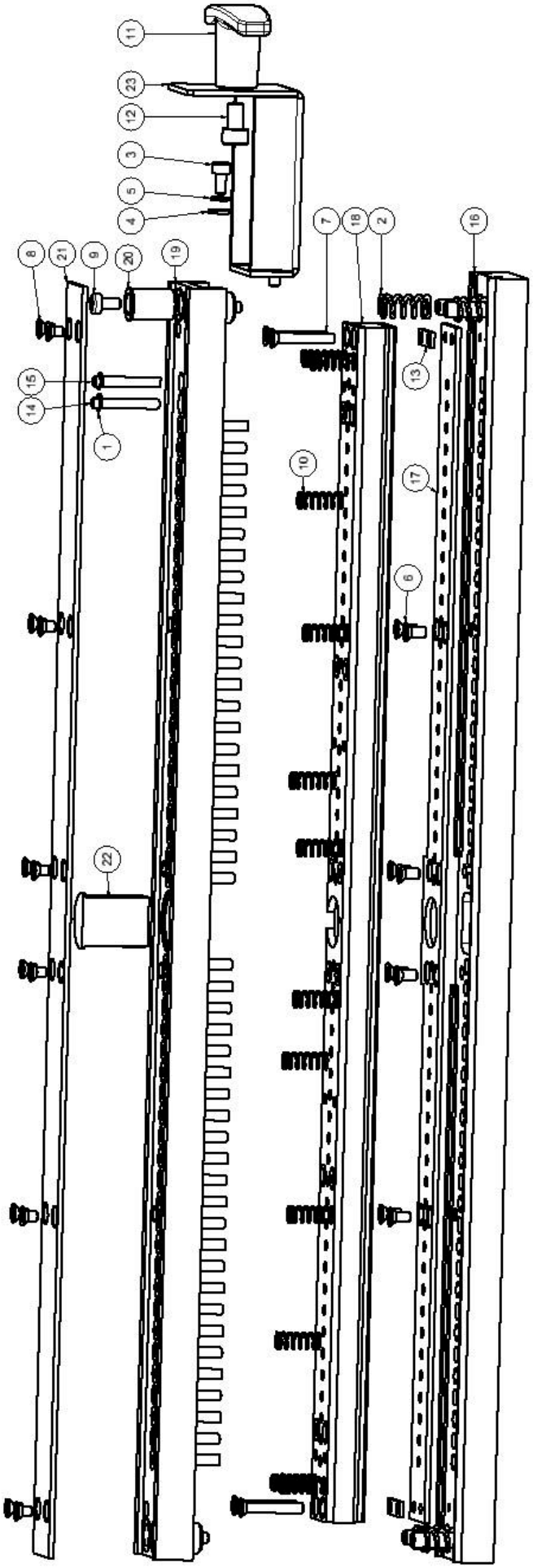
11
23
12
3
5
4
8
21
9
20
19
15
14
1
22
7
18
2
16
13
10
17
6

Punching tool 3:1,calendar punch - round 571 40 476				
Pos.	Pcs	Catalogue Number	Name	
1	48	311 42 469/0	Locking washer for shaft 3,2	
2	4	315 70 191/0	Compression spring	
3	2	309 10 286/2	Screw M4x8 VS	
4	2	311 21 412/2	Washer 4,3	
5	2	311 28 427/0	Spring washer 4	
6	8	309 02 284/2	Screw M4x8 K sunk	
7	4	309 02 398/2	Screw M4x25 K sunk	
8	12	309 11 206/2	Screw M4x6 K sunk	
9	4	309 11 204/2	Screw M4x8 K	
10	12	315 70 170/0	Compression spring 220 24 089	
11	1	321 00 043/0	Handle T	
12	1	309 10 150/2	Screw M6x10 VS	
13	2	571 46 537	Tooling distance	
14	24	571 21 443	Punch L=27	
15	24	571 21 444	Punch L=27,5	
16	1	571 59 045	Lower of tool	
17	1	571 46 734	Matrix -calendar	
18	1	571 59 081	Backbone - calendar	
19	1	571 33 219	Comb - calendar	
20	4	571 59 060	Guidance of tool	
21	1	571 46 534	Lid - calendar	
22	1	571 33 171	Punch - calendar	
23	1	571 46 737	Handle of tool	

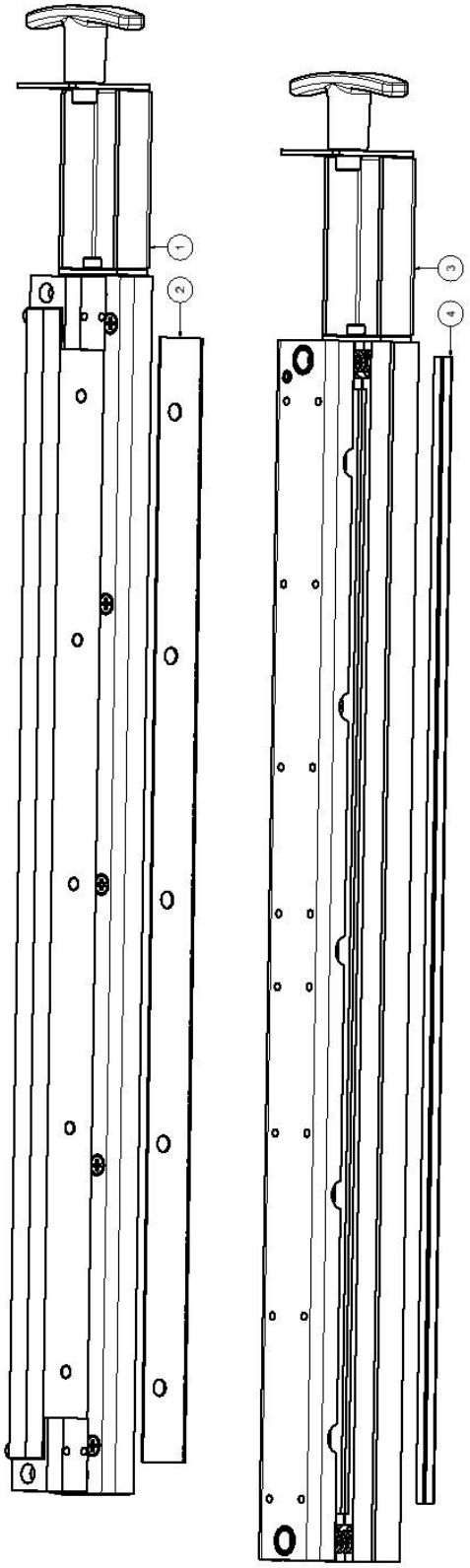

GoCrease F-Speed - extra equipment				
Pos.	Pcs	Catalogue Number	Name	
1	1	571 40 464	Micro-perforating tool	
2	1	571 48 763	Micro-perforating knife 30/1"	
3	1	571 40 468	Creasing tool CITO 1,4	
4	1	571 48 793	CITO DYNAMIC 1,4x0,5x470	

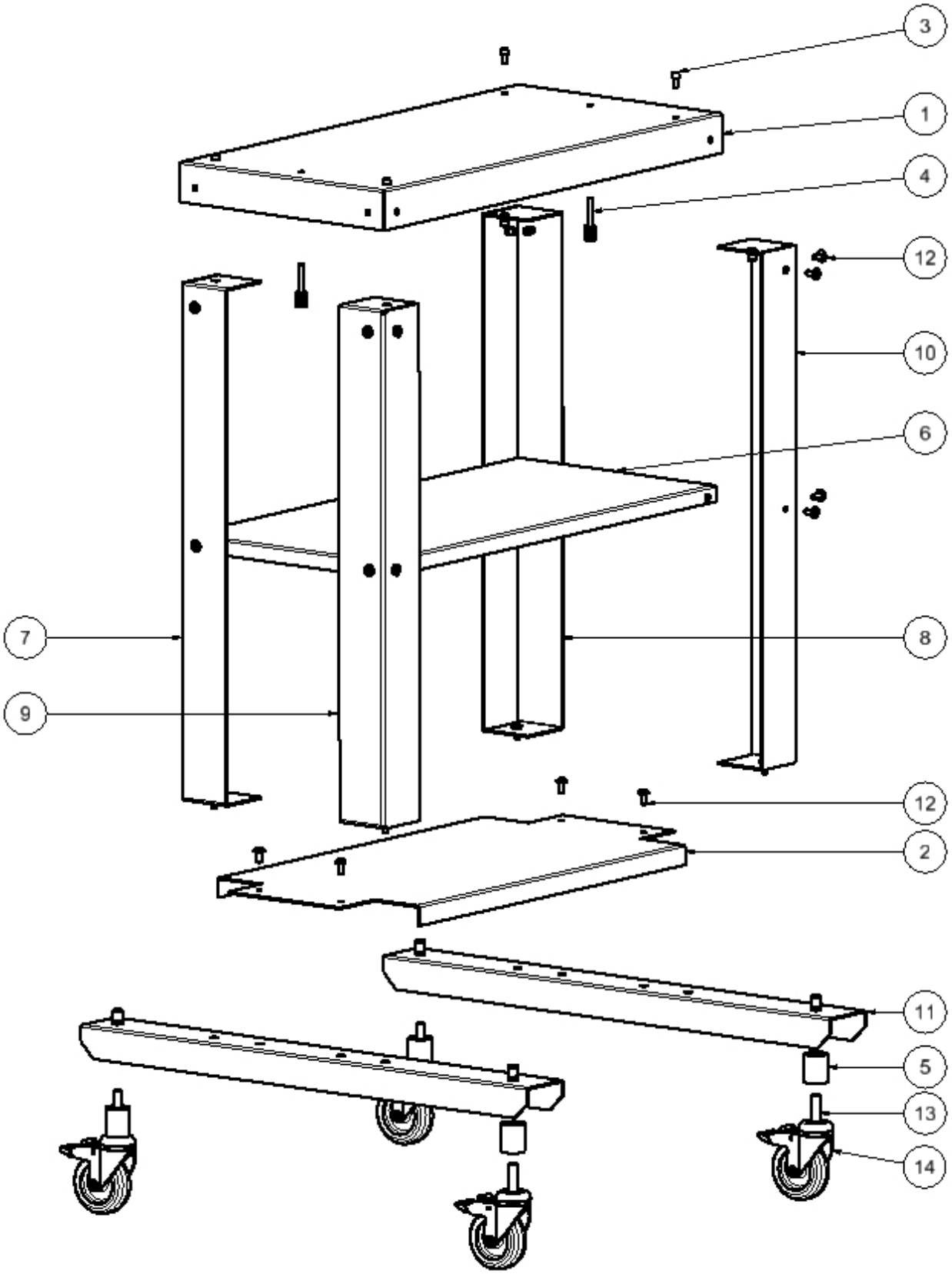
3
1
4
12
10
6
7
8
9
12
2
11
5
13
14

Mobile table 571 40 365				
Pos.	Pcs	Catalogue Number	Name	
1	1	571 46 703	Upper plate	
2	1	571 46 701	Bottom	
3	4	309 10 278/2	Screw M6x12 VS	
4	2	580 49 240	Fixing bold	
5	4	571 33 150	Distance piece	
6	1	571 49 897	Shelf	
7	1	571 49 898	Leg 1	
8	1	571 49 899	Leg 2	
9	1	571 49 900	Leg 3	
10	1	571 49 901	Leg 4	
11	2	571 49 902	Support	
12	24	309 10 381/2	Screw M6x14 VS+L	
13	4	309 10 383/2	Screw M10x60 VSO	
14	4	549 00 043/0	Wheel with brake D75	

Recommended spare parts